PORTFOLIO
NIKHIL MOHANAN
MECHANICAL ENGINEERING

PROJECTS GUIDED/WORKED ON- 2015-17
APPLICATIONS OF COMPUTATIONAL FLUID DYNAMICS

1. Study of Drag and Lift Performance of road cars with modified tail and other body modifications

Aerodynamics and automobile technology have merged very slowly; a synthesis of the two has been successful only after an epic series of trial and errors. The need for fuel efficiency has increased in car manufacturing industries in the recent years. Extensive research is being undertaken for development of aerodynamically optimized vehicle designs. The coefficient of drag is an important factor that determines the fuel economy of a road vehicle.

The main objective of this research is to study the of drag over a standard sedan class car, using a CAD model created on CREO Parametric and a modified version of the same car, with a more streamlined design. For analysis the Reynolds-Averaged Navier-Stokes (RANS) equations with Realizable k-e turbulence model was used over ANSYS 14, FLUENT Solver. The Simulations were done at 60kmph, 80kmph, 100kmph and 120kmph, and the results were compared with that of the stock model design. Various Parameters were examined and analyzed to make the conclusion clear.

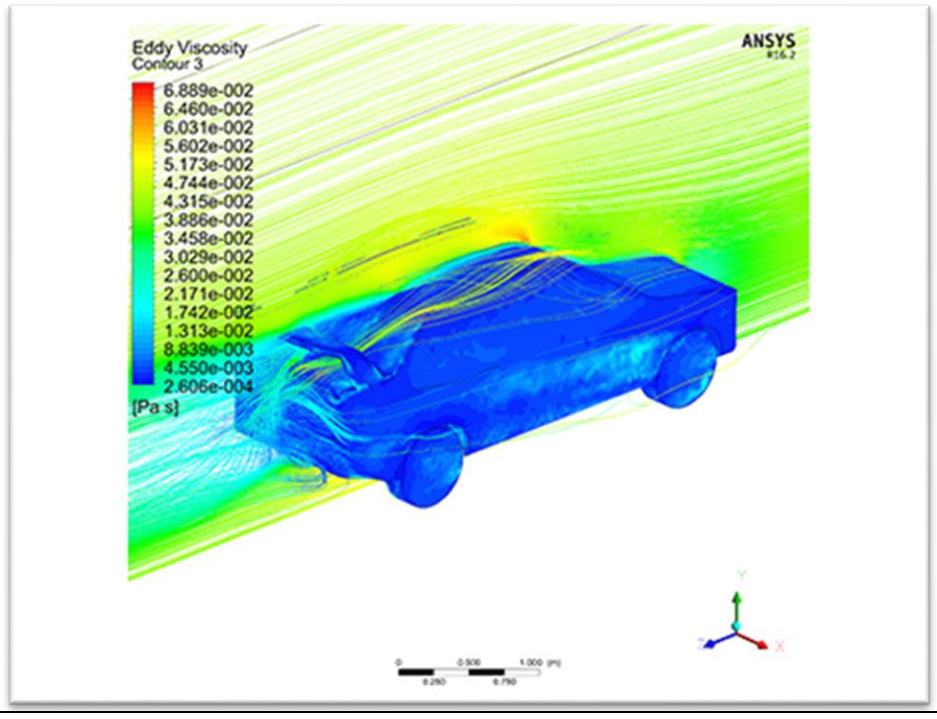

2. Study of Variation of Piston Head on Combustion Performance Characteristics of Diesel Internal Combustion Engines

The next generation engines need to be compact, powerful and produce less pollution and use less fuel. The ability to accurately and rapidly analyze the performance of engine designs is critical. Unlike analytical and experimental methods, CFD modeling allows designers to simulate and visualize the complex fluid dynamics with sub-models for critical phenomena like turbulence and fuel chemistry.

The Swirl and tumble inside the combustion chamber hugely impacts on the combustion efficiency of the engine. This study emphasizes on comparing the variation of pressure generated during diesel combustion in modified engines. The chosen test designs include various piston head configurations taken from those available in the market such as those in engines used by Tata, Maruti- Suzuki, Mahindra and Chevrolet. The temperature and pressure outputs along with residual un-burnt fuel volume were used to compare the models

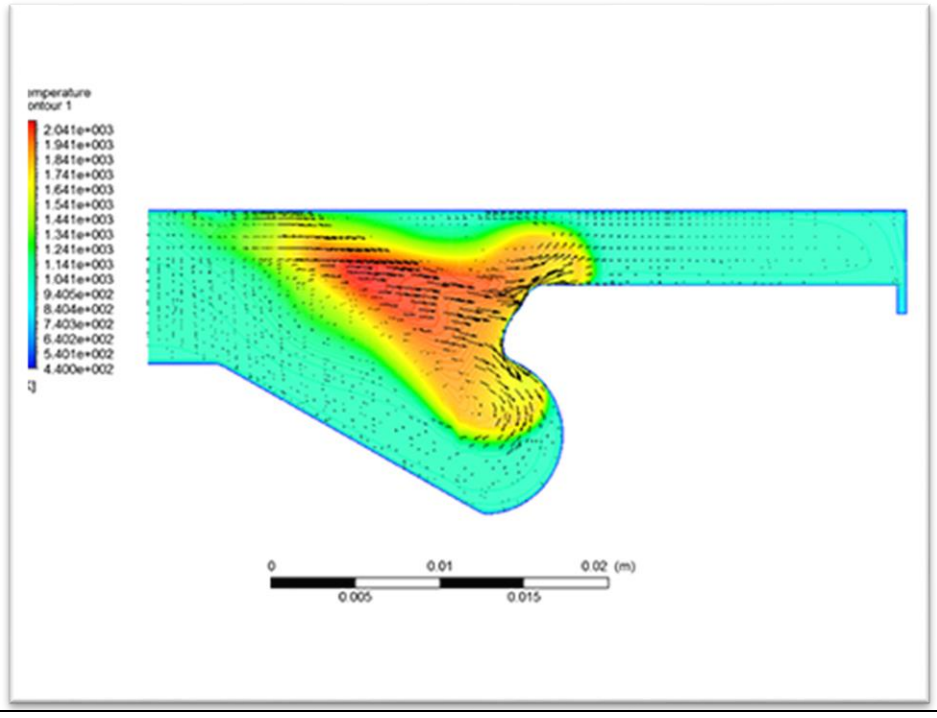

3. Numerical Investigation of performance characteristics of combined parallel and serial in dual shell-pass shell and tube heat exchangers under multiple baffle configuration

The shell and tube heat exchangers (STHX) easy to manufacture and can be applied to various industrial processes and in large range of operating conditions. Though there are different types of STHX, the two prominent ones are the Segmented baffle type heat exchangers (SG-STHX) and the helical baffle type heat exchangers (H-STHX)

The SG-STHX have several setbacks. The existence of large pressure drops due to the resistance offered, the existence dead zones inside each segments leading to an increase of fouling resistance and an increased vibration due to the zig-zag flow. Though, the H-STHX provide a good choice by avoiding the aforementioned problems, they too have other setbacks. The heat transfer performance of the H - STHX is poorer compared to the segmented baffle type; the flow becomes weak towards the central axis decreasing the heat transfer performance and difficulty of manufacturing increases with increase in helical surface steepness towards the central axis.

To counter these, hybrid STHXs were designed. This research focuses on the shell side computational analysis of performance variation over combined series-parallel dual shell pass helical baffled shell and tube heat exchangers. Within this research, we analyze the effects of segmented baffle spacing, helical angle variation and the diameter ratio of the two-shell passes over the performance of the heat exchanger.

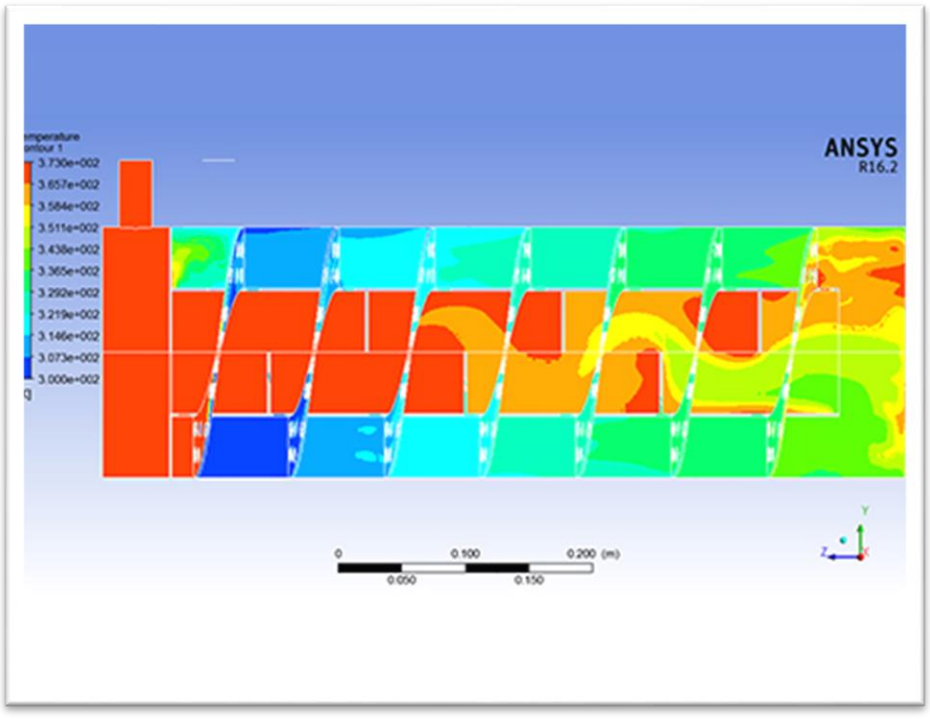

4. Numerical Investigation of heat transfer and pressure drop in shell and tube heat exchangers with baffle

The heat exchangers are the devices used for transferring heat between two or more fluids at the different temperature, pressure etc. Heat exchangers are classified according to their functions, applications and geometry. In most of the applications the two or more fluids do not mix together but the heat transfer is taking place through the different geometry surfaces in which they are in contact. The shell and tube heat exchangers are most commonly used heat exchanger in different industries, such as chemical and food industries, refrigeration, air conditioning, space heating applications, electricity generation, environmental engineering, waste heat recovery, manufacturing industries, marine ships and offshore plants.

This research focuses on shell and tube heat exchanger with different fluid combinations. The thermal performance of Shell and Tube Heat Exchanger's (STHE) is highly influenced not only by inlet temperatures, velocities, baffle cut size, baffle spacing, size of inlet an outlet zones and number of baffles but also flow direction, fluids used in shell side and the tube side, the turbulence generated within the heat exchanger and the flow induced vibration occurring in the system during operation. Hence, it is more important to carry out a study to find the influence of fluids with properties, along with the effects of vibration characteristics on heat transfer rate and pressure drop of shell and tube heat exchanger with baffles. The study involving different fluid-fluid configurations was used to identify the configurations of STHX and its effective in transferring heat with of fluid combinations involving water, seawater and oil.

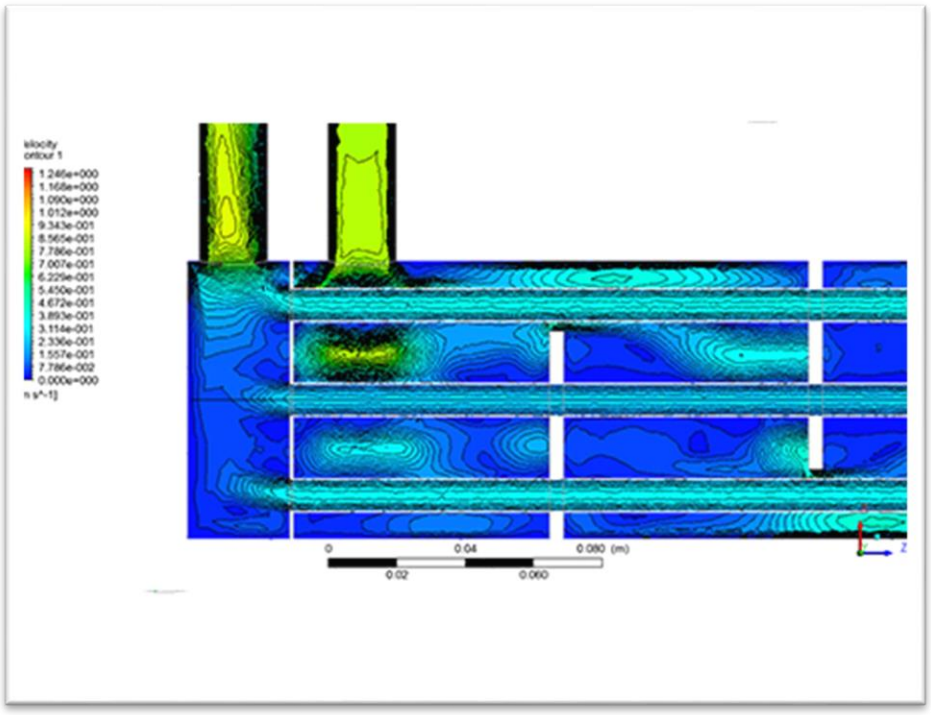

5. Numerical Investigation of Flow and Thermal Characteristics in Chevron Type Plate Heat-Exchanger

The type of heat exchanger which uses metal plates to transfer heat between two fluids is commonly termed as a plate heat exchanger. It facilitates a faster heat transfer because the availability of a larger surface area and is generally made of stainless steel due to its corrosion resistance and high temperature operability.

The heat is transferred as the fluid flows through the channel groves within the sandwiched plates, creating a counter current flow for highest heat transfer efficiency. With the use of gaskets, no intermixing of the fluid will occur as around plates.

The objectives of this study are to investigate the heat transfer performance of chevron type plate heat exchanger for heat recovery in marine diesel engine. Further focus on identifying the parameters and flow configuration that gives optimum transfer rates.

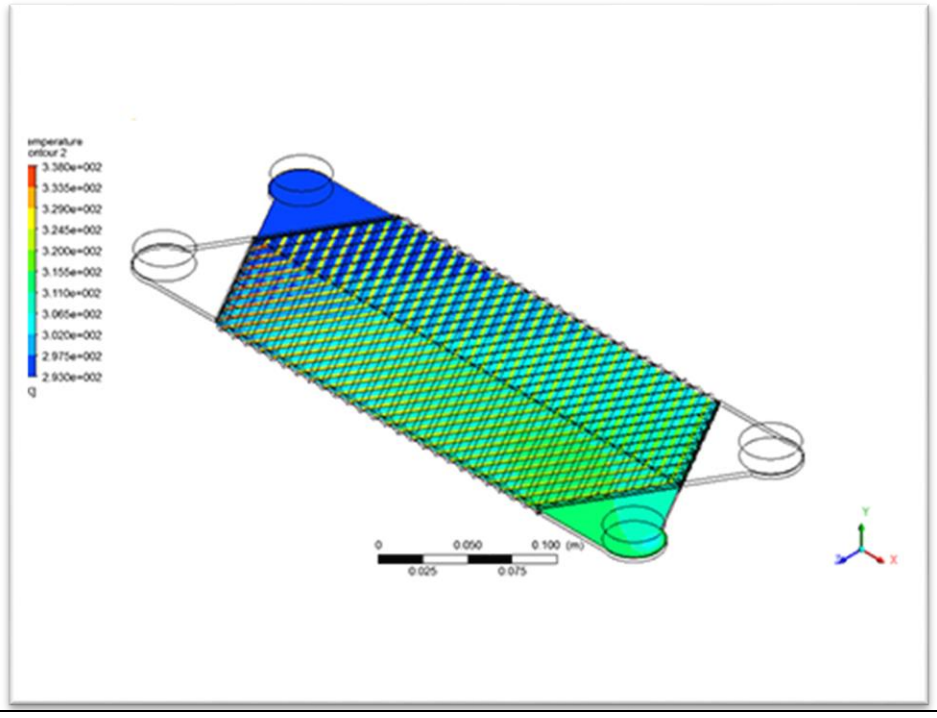

6. Response Surface analysis of Curved fin coaxial heat exchanges for tight-package applications

In the modern era, heavy duty vehicle manufacturers resort to the exhaust gas recovery as an efficient way to save fuel and reduce emissions. Their application stretch from conventional vehicles to even hybrid ones. Simultaneously the need to recover the maximum amount of heat from a limited amount of space arises.

In this study, response surface methodology RSM is used to identify an optimum design for curved finned coaxial heat-exchanger for compact applications. For this particular study the exhaust gas setup from OM314 diesel engine from the experiments of M. Hatami et al (2014) has been used as the primary analysis.

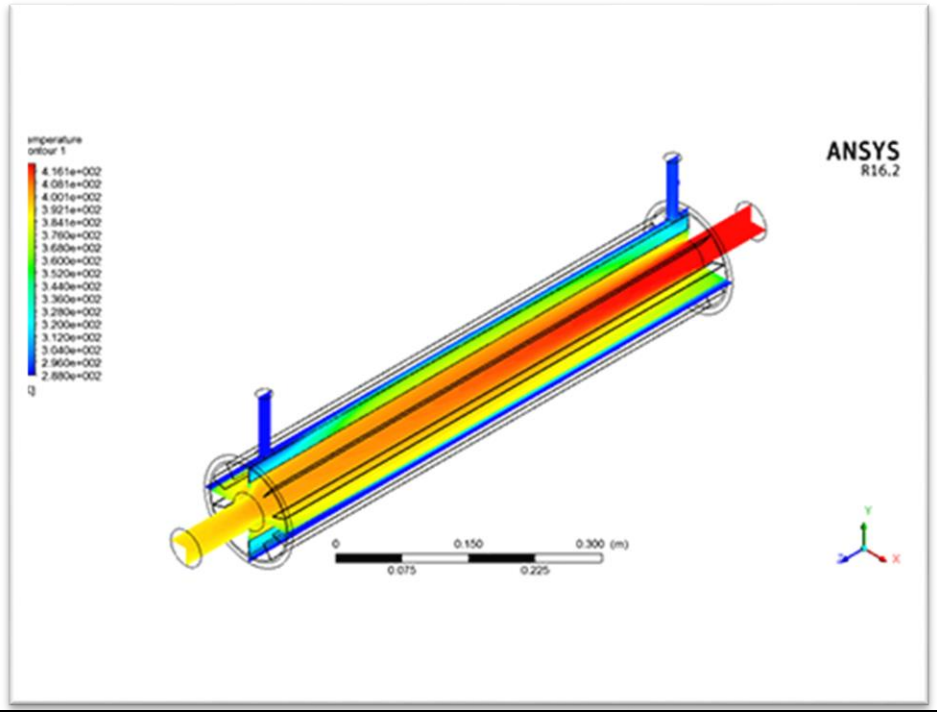

7. Verification of Hydrodynamic Drag of Underwater Rover Designed at National Institute of Oceanography, Chennai

The recent years saw the advancement in the field of autonomous and unmanned vehicles used for exploration, surveillance, military operations etc. Unmanned Underwater Vehicles (UUVs) have been used to explore the secrets of the oceans and to mine deep sea resources. Generally, UUVs can be classified as Remotely Operated Vehicles (ROVs) and Autonomous Underwater Vehicles (AUVs). Between the two, the ROV is the main workhorse used in the industry. Compare to a human diver, an ROV can go deeper and into riskier areas.

This study involves modeling and validation the results of the results of coefficient of drag and lift including the resultant moment on the design specific Underwater ROV

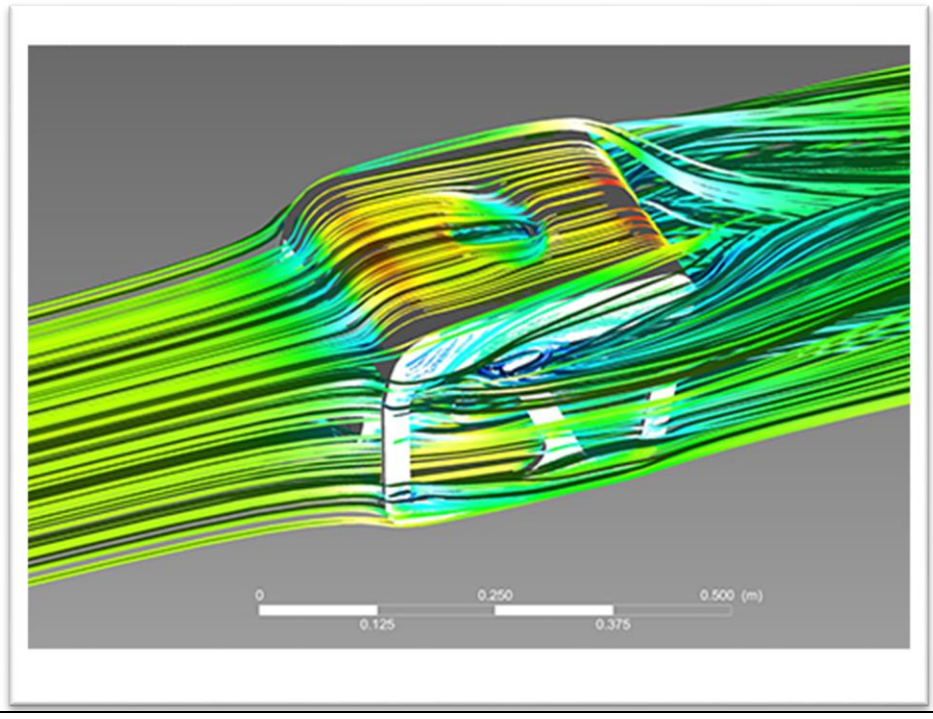

8. Effect of Nano Particles on Multi-Phase Nano Fluids over Coaxial Heat Exchangers

The idea of suspending nanoparticles in a base liquid for improving thermal conductivity, such suspension of nanoparticles in a base fluid is called a nanofluid. Nanofluids are stable suspensions of nanoparticles in base fluids that show many interesting properties. The use of nanopowder along with the conventional refrigerants in vapor compression cycle is a relatively a new idea.

In this study alumina (Al2O3) and magnesium nanoparticles of 20 nm diameter are dispersed in refrigerant R134a to improve its heat transfer performance. In refrigeration systems the nanoparticles can be either added to compressor lubricating oil or to refrigerant. The 2D modeling was done to validate and then to study the heat transfer characteristics. The volume ratio of the particulate were changed and the subsequent effects were studies.

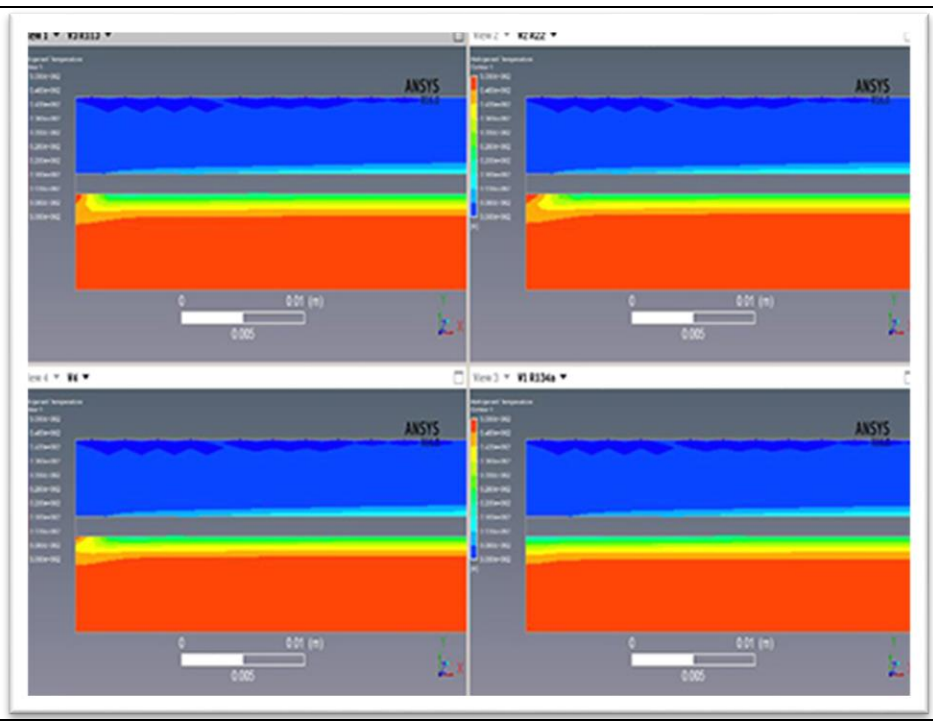

9. Parametric Study of the performance of Tesla Turbines based on design

The Tesla turbine is a bladeless centripetal flow turbine patented by Nikola Tesla in 1913. The Tesla turbine is also known as the boundary layer turbine, cohesion-type turbine, and Prandtl layer turbine because it uses the boundary layer effect and not a fluid impinging upon the blades as in a conventional turbine. It consists of a set of smooth disks, with nozzles applying a moving fluid to the edge of the disk. The fluid drags on the disk by means of viscosity and the adhesion of the surface layer of the fluid. As the fluid slows and adds energy to the disks, it spirals into the center exhaust.

This study involves variation of parameters such as spacing, diameter, number of discs, number of nozzles, design of the nozzle etc to understand the torque generated.

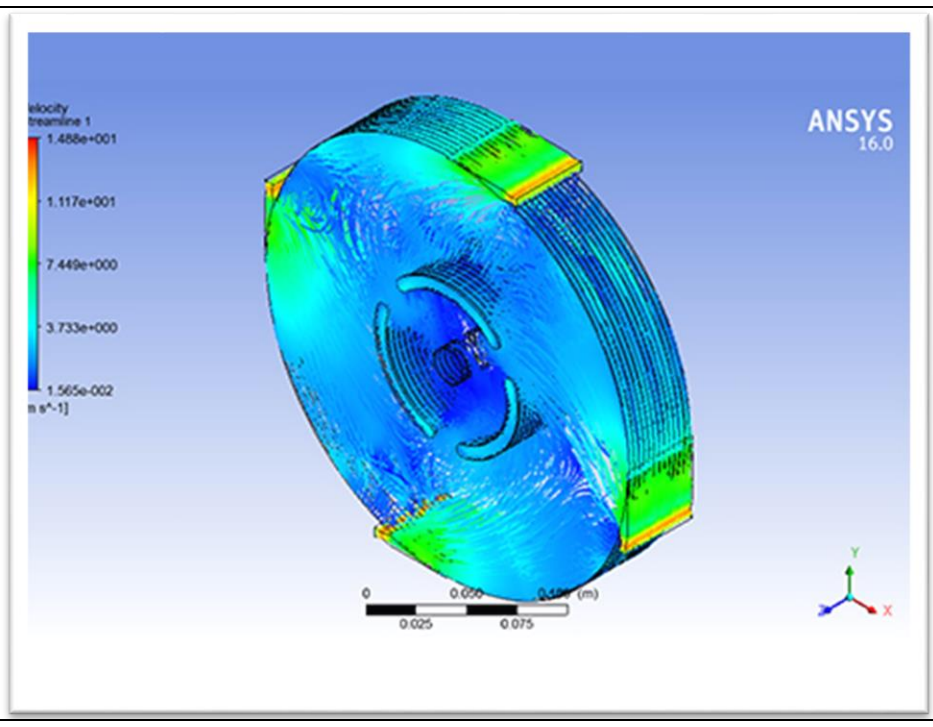

10. Parametric Performance Study of Supersonic Ejectors used in Refrigeration Systems

The supersonic ejector-diffuser system was widely used in many industrial applications. Recently, it is also being used as one of the most important components of the solar seawater desalination facility. That is because this system has many advantages over other fluid machinery like no moving parts and no direct mechanical energy input. The system makes use of high-speed primary stream to entrain the secondary stream through pure shear action for the purposes of transport or compression of fluid.

The parametric study involves modeling and predicting the variation of entrainment ratio with change in back/suction pressure, inlet generator pressure, ejector throat length, diffuser length, inlet radius of nozzle, outlet radius of nozzle and for different types of refrigerants.

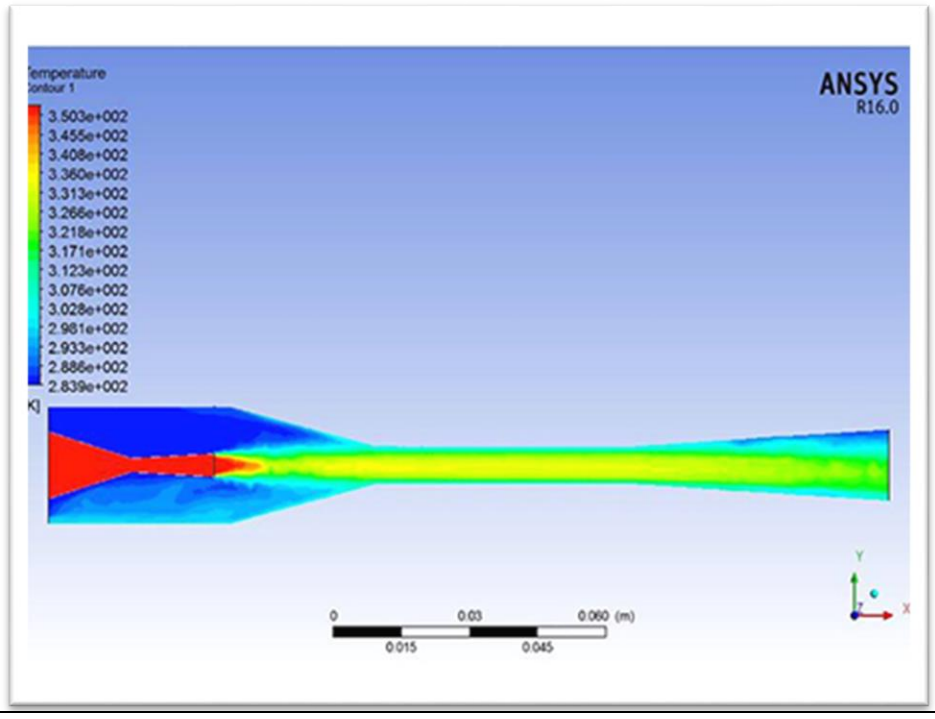

11. Study of Energy Separation in Vortex Tubes based on Inlet cross-section and incidence angle

Ranque-Hilsch vortex tube is a device in which air is supplied tangentially inside a cylindrical tube and exits axially at both the ends of the tube. Rudolf Hilsch, suggested that angular velocity gradients in the radial direction give rise to frictional coupling between different layers of the rotating flow resulting in the migration of energy via shear work from the inner layers to the outer layers. As a result, one outlet produces hot air from the periphery of the tube farther from the inlet and the other produces cold air from a centre of the tube near the inlet.

This study emphasis to investigate the variation of energy separation characteristics with the inlet cross section and the angle of incidence of the flow into the vortex tube. Moreover this study also focus on understanding the mechanism that leads to energy separation. The Reynold stress model along with Ideal gas density formulation and the Sutherland viscosity law have been used for the flow.

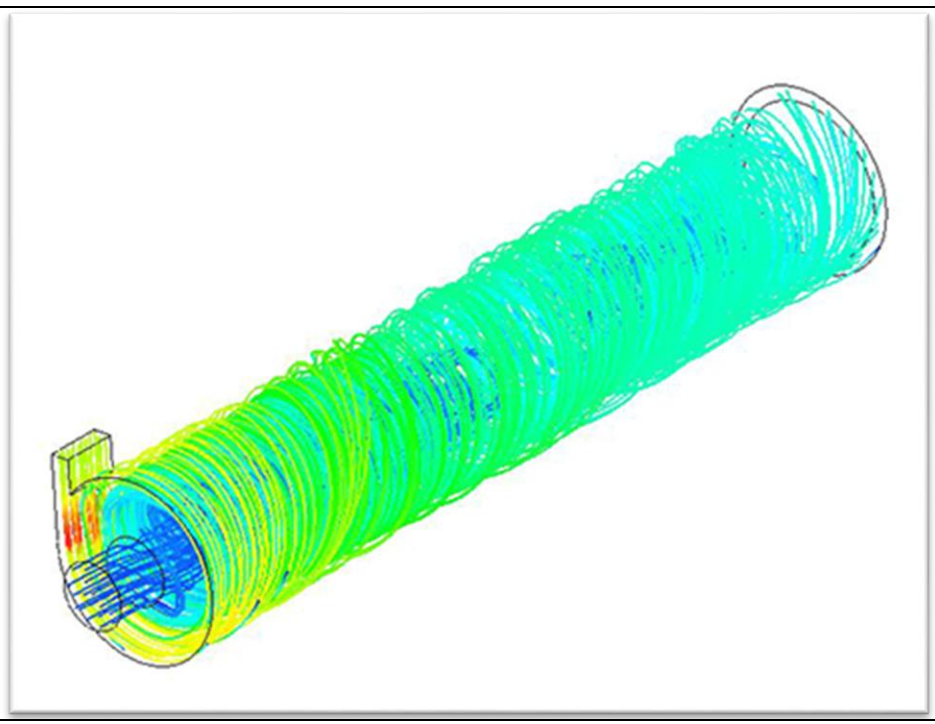

12. Study of Centrifugal Compressor Design for Efficient Performance Characteristics

Modern Internal combustion engines require high pressure ratios to perform efficiently at the same time reduce emissions. For such applications, a centrifugal compressor with high pressure ratio and broader operating range may be employed. The impeller design of such compressors play a vital role in producing the efficient operation and hence today's research focus rigorously over its design.

The objective of the current investigation is to study the performance of centrifugal compressors based on variation in impeller hub diameter, exit width and shroud extensions for different rotational speeds. Shroud extensions have previously found to generate higher pressure rise at the same time have the least amount of losses. The pressure ratio, exit mach, turbine noise and thermal aspects were the main considerations for the study. Mathematical formulation of standard test cases were used to validate the computational model.

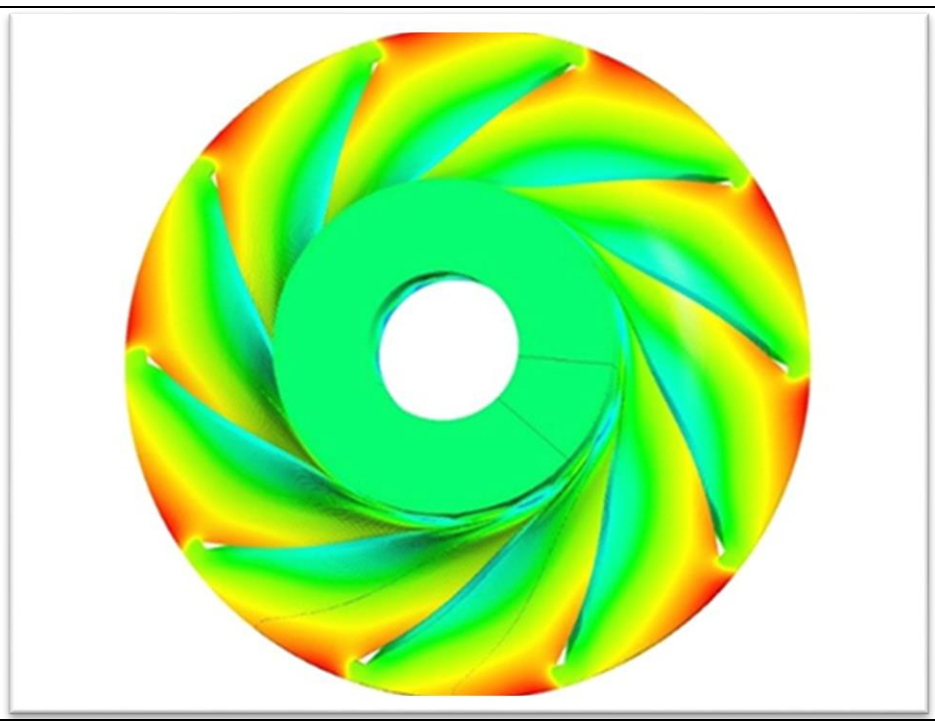

PROJECTS GUIDED/WORKED ON- 2015-17
APPLICATIONS OF FINITE ELEMENT ANALYSIS AND STRUCTURAL MECHANICS

1. Study of Carbon fiber composite Isotruss tower subjected to static and dynamic loads

Iso-Truss is a light weight-efficient alternative to solid or shell structures made from wood, steel, aluminum or composite. It is highly symmetric and redundant design makes it substantially resistant to local and global buckling, while at the same time cost effective and easy to manufacture.

Here we focus on the load carrying capabilities of different types of Iso-trusses generated from different base geometries to investigate their load carrying capability, their buckling resistance and further their endurance.

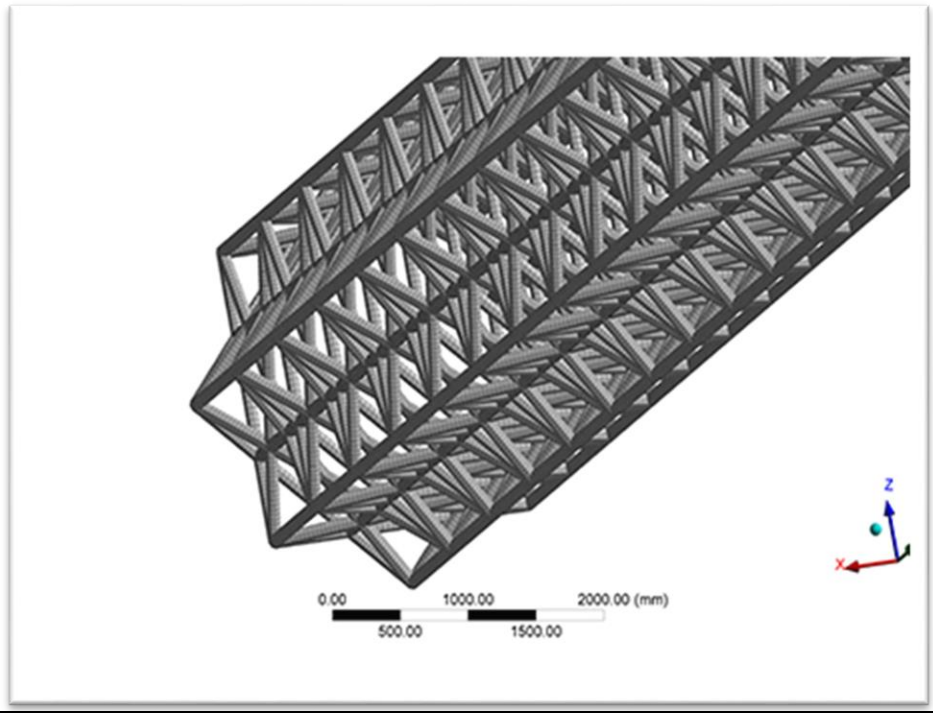

2. Study of Lateral Torsional Buckling of Castellated I Girders with Corrugations

Lateral Torsional buckling may occur in an unrestrained beam. A beam is considered to be unrestrained when its compression flange is free to displace laterally and rotate. When an applied load causes both lateral displacement and twisting of a member lateral Torsional buckling has occurred.

In this study, the Critical buckling load and Load carrying capacity for Corrugated and Triangular-Web Steel Girders were studied and compared. The Lateral Torsional buckling is considered as the major failure mode by the use of a small imperfection under normal loading conditions. The study was expanded into a parametric study using triangular and trapezoidal corrugations with sinusoidal castellations.

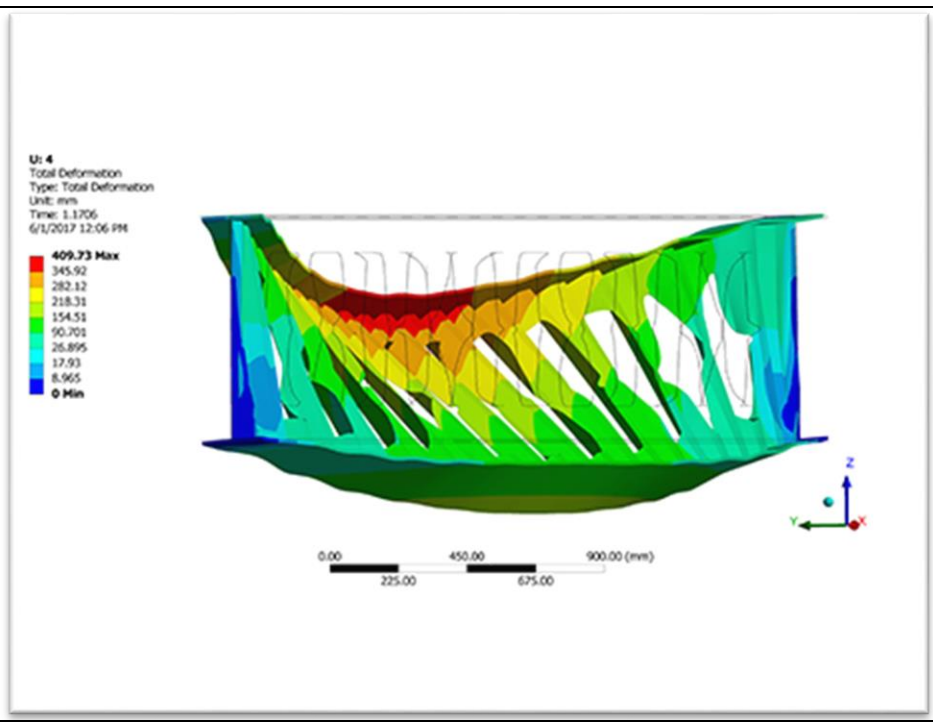

3. Buckling Response of Gusset Plates used in Steel Construction

Gusset plates are used in steel buildings to connect bracing members to other structural members in the lateral force resisting system. Gusset plates are also used to connect diagonal members to the chords and vertical members of trusses.

This research discusses the Inelastic buckling strength of gusset plate provided splice plate on both sides in concentrically braced frames. The study also involves a parametric analysis to understand which configuration of riveting is the best suitable method of connection along with which Section shall be used as a splicing member for most strength

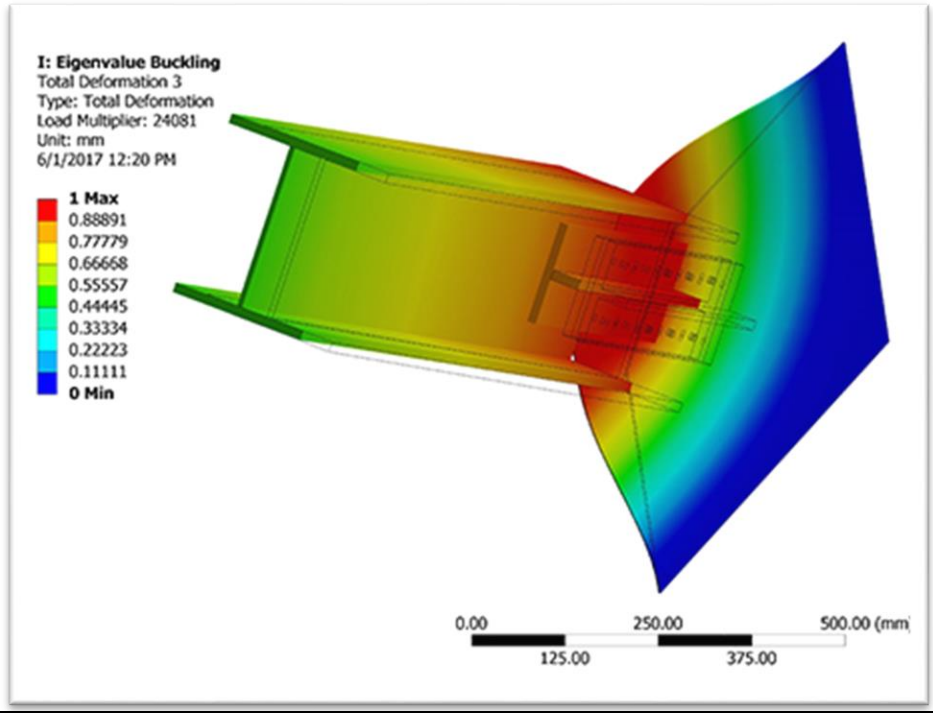

4. Study of Epoxy Carbon-Aluminum Alloy Composites Fiber Metal Laminate (FML) - I section against Buckling

Advanced structural materials in almost all of the industries are currently associated with the use of thin-walled composite structures. The group of composites which are constructed by binding fiber-reinforced laminates with metallic layers are termed as Fiber Metal Laminates (FML). Today, most of the FML applications are based on unidirectional glass fiber-reinforced prepregs combined with Al alloys (GLARE type) sheets.

In this study we focuses on the buckling behavior of Fiber Metal Laminate(FML) I sections subjected to uniaxial compression. The primary objective is to identify the behavior of the laminate orientation on the post-buckling response of the section. Further the possibility of delaminating during buckling is also considered during post-buckling.

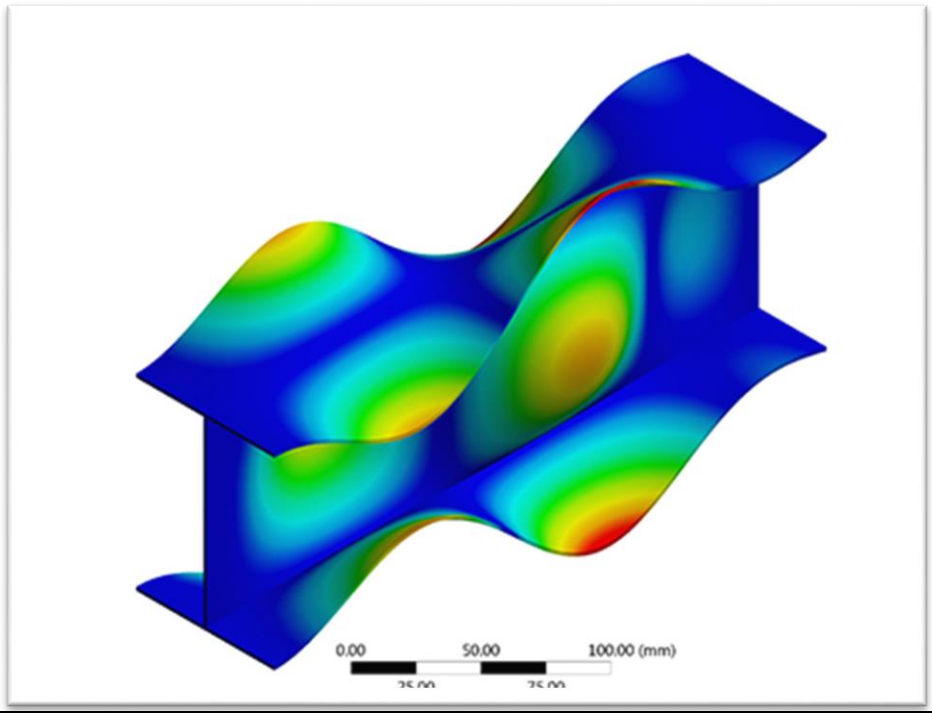

6. Linear Buckling behavior of reinforced Plain and sinusoidal Grain storage Silos with stiffeners

The design of thin-walled metal cylindrical silo shells against buckling is one of the most important challenges for civil engineers. Silos are vulnerable to buckling failures caused by the wall friction force due to the interaction between the silo fill and silo wall, particularly during eccentric discharge. As a consequence, non-uniform horizontal wall pressures develop which contribute to meridional bending and a non-symmetric distribution of wall compressive forces.

In this research we investigate the linear buckling response of corrugated and plain surface silos, subjected to complete loaded condition modeled using hydrodynamics force. Further the silos are reinforced with different longitudinal column and ring stiffeners along with cross and X reinforcements.

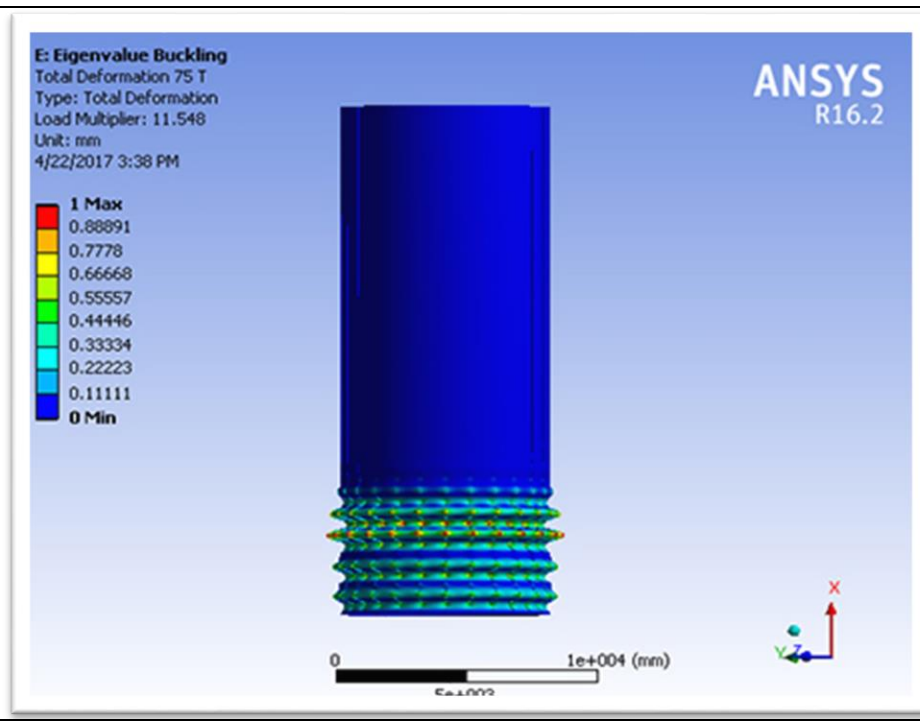

5. Post buckling response of Square composite shells with temperature induced perturbations

Since introduction of composite materials have turned out to be one the most important and sought after engineering material in the industry. They have been widely used in the aerospace industry and in high load carrying construction. The affinity of these structure towards failure under coupled thermal conditions play an important role in their life and load carrying ability.

In this research our focus lie on linear and post buckling response of thin walled-square composite beam sections subjected to thermal stresses. The thermal stresses generated could be caused by sudden change in temperature, climatic changes or even fires. These thermally generated imperfections, along with the static loads could lead the structure to a catastrophic failure by buckling, and hence forms the basis of our study.

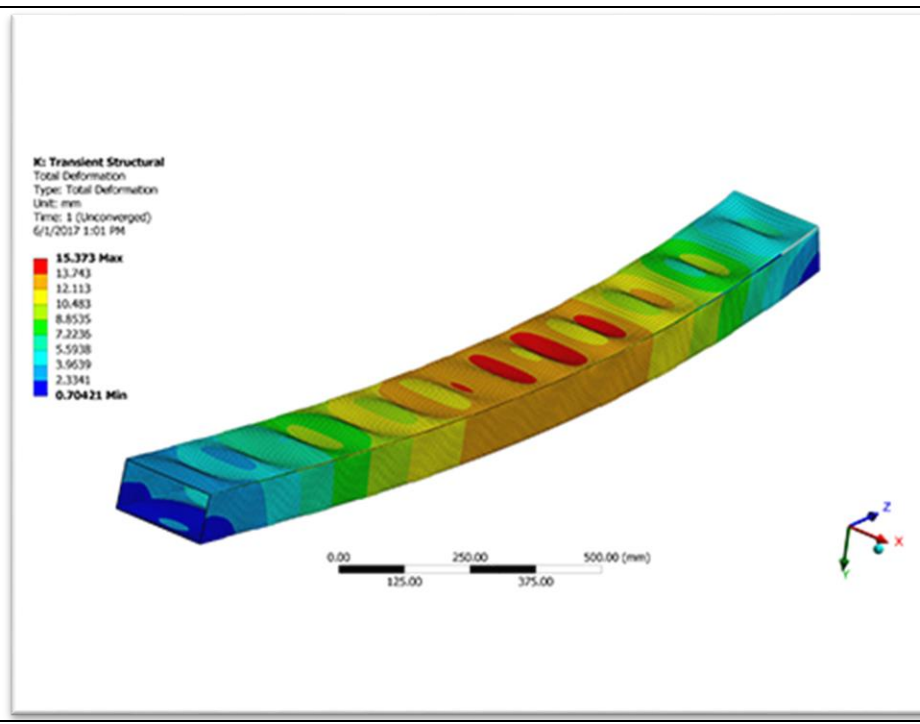

7. Linear & Post Buckling behavior of offshore Jacketed Sub-structures subjected to waves.

With development in renewable energy technologies, wind energy became one of the primary consideration for mass scale energy supply. However, the area where wind farming can be pursued are limited on the land. And so, the wind farming took a new leap into offshore sites. In European the main focus shifted to Offshore wind farming, now with over 82 wind farms across 11 nations. The installation of such offshore wind-farms in massive scale thus lead to research into the offshore structures, especially the substructure.

This study focuses on investigating the post buckling response of offshore jacketed substructures. Various designs from Tripod to Four-Legged along with different types of bracings have been studied with reference to their buckling response.

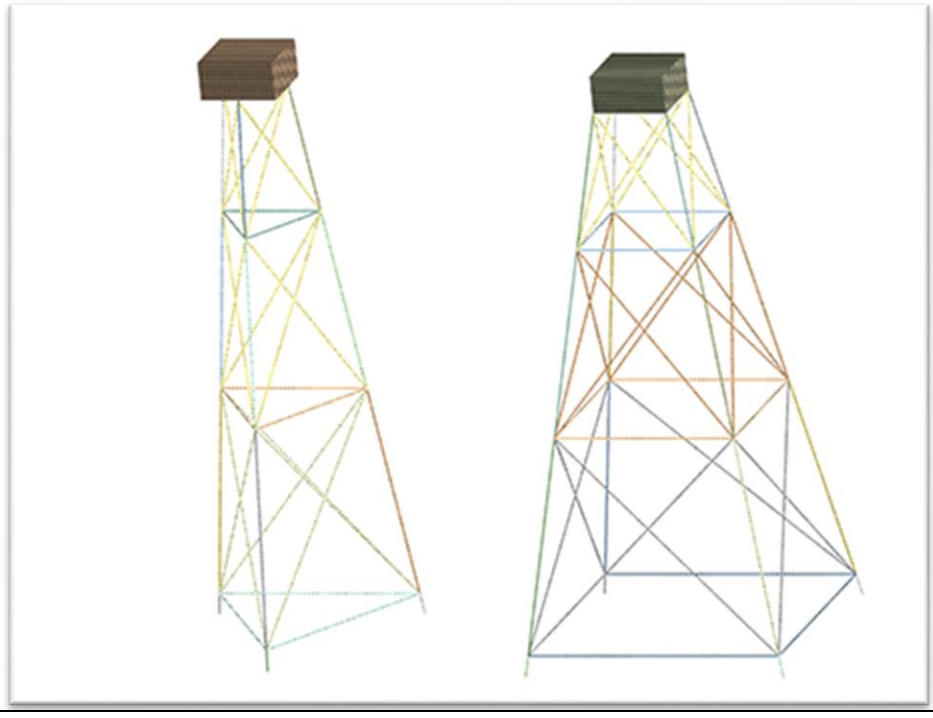

8. Study of Failure of Composite Riveted Joints with Adhesive

Joints are integral parts in a structure, as they are the weakest links in a structure. The strength of the structure therefore depends on the strength of the joints as well. There are two types of load-carrying joints available - mechanically fastened joints and adhesively bonded joints. Recently, a new concept of hybrid joining has been developed. Hybrid joining is the combination of two or more joining techniques to produce joints with properties additional to those obtained from a single technique.

This research work includes the study of two different types of joints, namely hybrid single-lap joint and hybrid double-butt joint. The joints are used to connect two plates of mild steel. Here, composite materials are incorporated in the joints to understand the failure and performance while the joints are subjected to a tensile loading conditions.

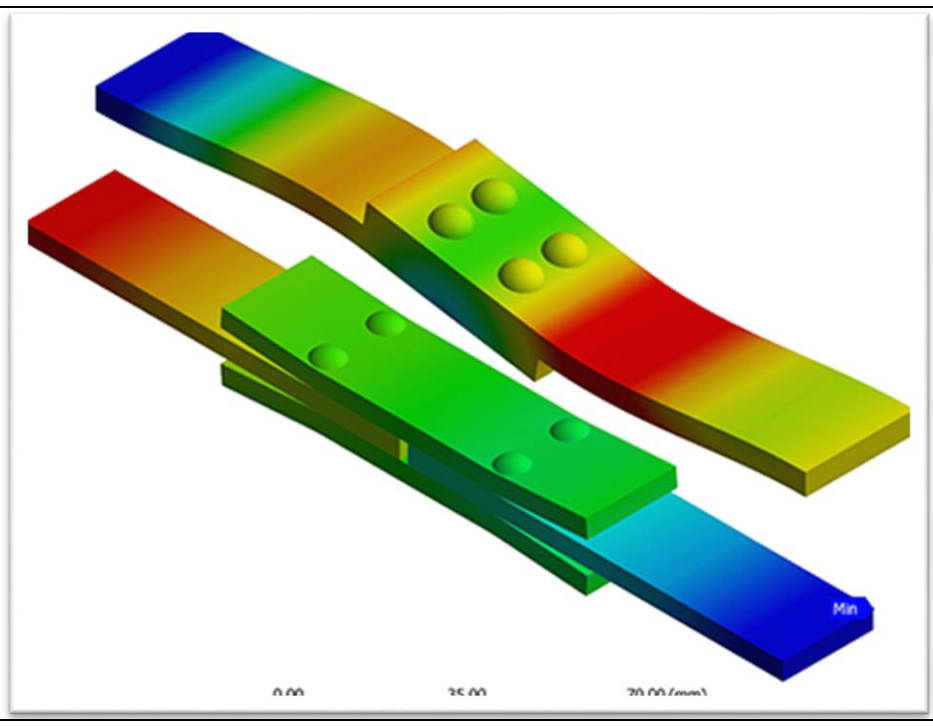

9. Numerical Study of the effect of Skewness on U-Girders with formation of cracks on Concrete

The U-shaped girder bridge (also called 'channel bridge') is a relatively new and innovative concept in bridge deck design. U-shaped girder is appropriate when a new or modified alignment structure requires an increase in the vertical clearance beneath the bridge. The concept of U-shaped bridge girder is now being increasingly adopted in urban metro rail projects and for replacing old bridges where there is a constraint on vertical clearance.

This study aims to understand the effect of skew angels for the Kochi Metro U Girder Railway Bridges at 25m Span. The U-Girders designed are unsymmetrical at 4 different skew angles of 0°,30°,45° and 60°. Further, investigation of section forces such as support shear, moment reactions, and deformations at different skew angles are compared.

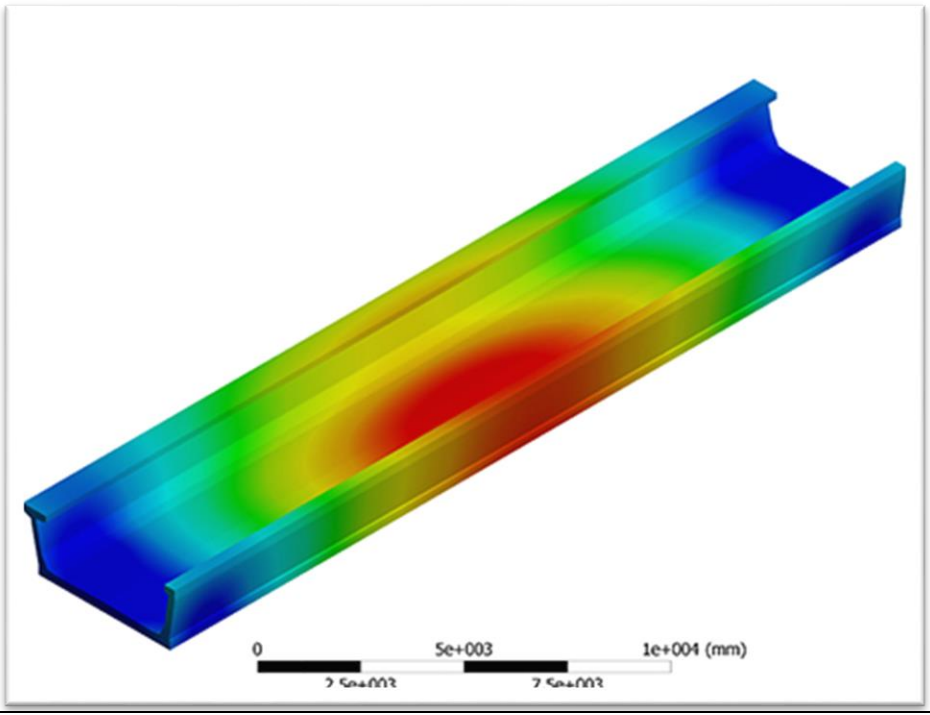

10. Response of Confined Concrete Beams with Semi Circular Plate - Reinforcement for Reduced Tension by Induced Compression

In order to provide higher mechanical effectiveness of confined cantilever concrete beam, the new technique proposed in this work consists of design at the ends of the steel reinforcement a half cylindrical plate, creating an induced compression applied in the tended zone of the concrete beam element, when the steel reinforcement is subjected to tensile forces developed by the bending load.

This technique ensures the concrete rigidity within the structure, avoids the problem of cracking and ruptures of the element and allows the transformation of the tensile force of the steel reinforcements into compressive force of the tended concrete inside half cylindrical plate. This design avoids the penetration of the steel reinforcement in the concrete which generates a shear-force of the section. The present study focused on comparative study of ordinary cantilever concrete beam with confined cantilever concrete beam. Compare the result with total deformation and shear stress by applying boundary conditions and different loading conditions (UDL, UVL and POINT LOAD). The output is verified using parametric analysis by varying the parameters like loading positions, number of reinforcements, plate thickness, steel bar thickness, types of forces.

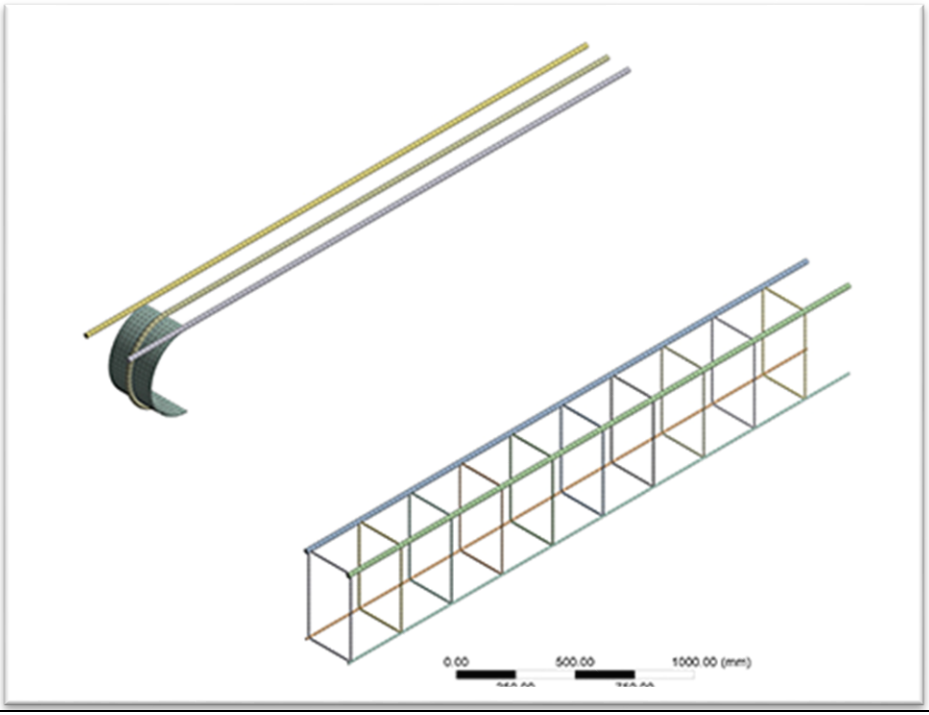

11. Enhancement of Structural Stability of Hyperbolic Cooling Towers with ring and cross stiffeners

Hyperbolic cooling towers are large but thin reinforced concrete structures used for the purpose of natural cooling in thermal power-plants. These towers work on the principle of natural draught and work efficiently to assist in the power production system.

The failure of these structures can cause catastrophes owing to their sheer size. And so, the design should be resistant to almost all kinds of failures and damages occurring both naturally and those by human negligence.

In this study, the general design of Hyperbolic cooling tower is analyzed over disaster load conditions such as hurricane winds and seismic activity. Moreover failure due to fatigue has also been considered. The study further proposes reinforcement of the structure using ring and vertical stiffeners to reduce their response to these failures.

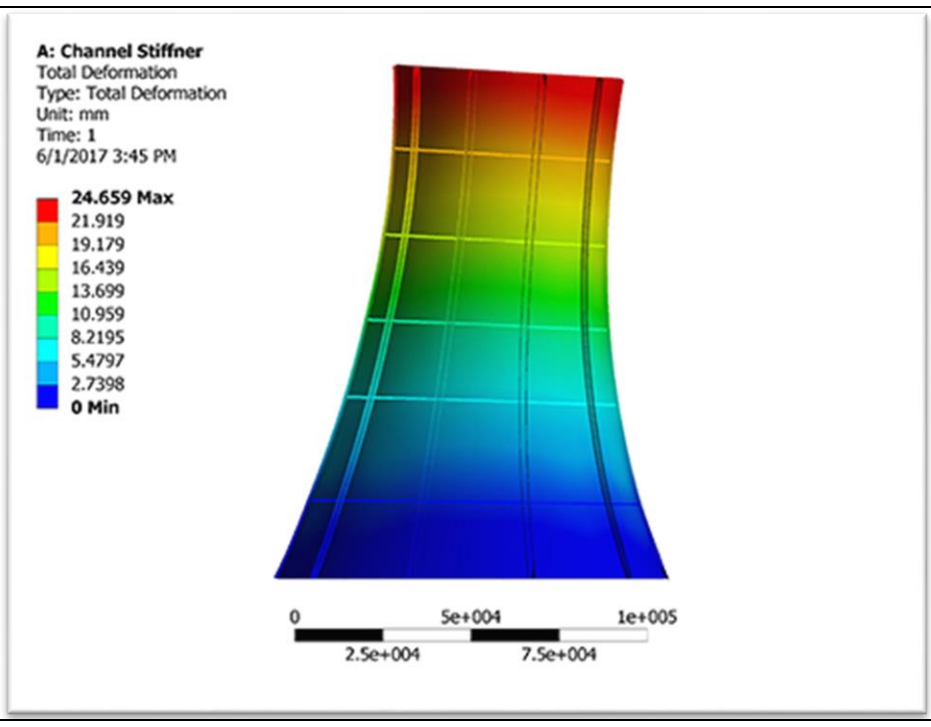

12. Design and Optimization of SCARA Robotic Arm for Industrial Applications

The first SCARA robot was created as a revolutionary prototype in 1978, in the laboratory of Professor Hiroshi Makino, at Yamanashi University in Japan. SCARA robots were introduced to commercial assembly lines in 1981 and still offer the best price/performance ratio regarding high speed assembly. SCARAs are generally faster and cleaner than comparable Cartesian robot systems. Their single pedestal mount requires a small footprint and provides an easy, unhindered form of mounting.

This project involved assessment of the lifecycle and stability of an indigenously constructed/assembled SCARA Robotic arm for a high mass pick and place robot. The Analysis involved elastic deformations and finding stress concentrations, modifying design to required safety and stress levels. Further the lifecycle and fatigue analysis were undertaken to predict the expected life of the design.

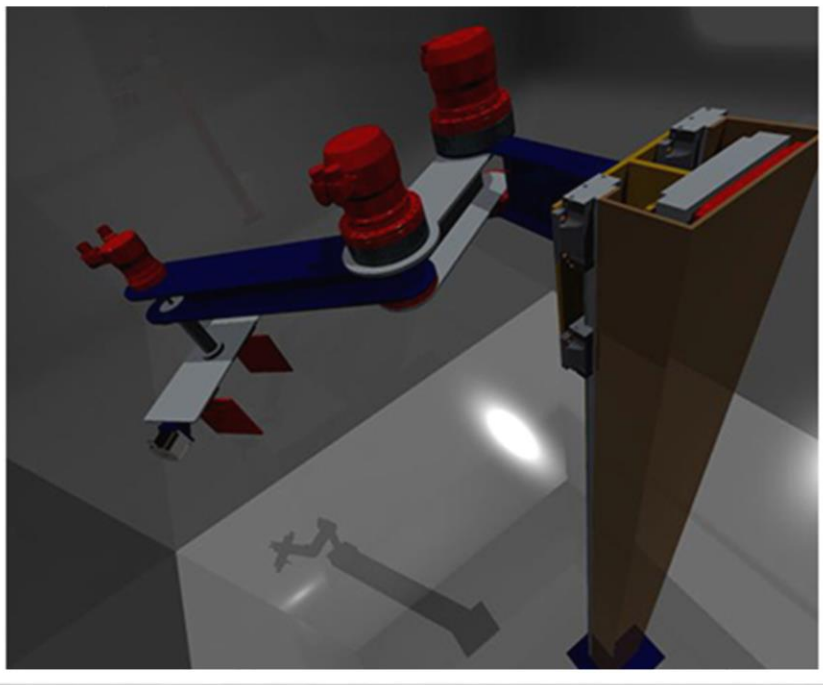

13. Study of Effects of Explosive Blast Loading on CFST Piers

Explosions whether knowingly or deliberately, are harmful to concrete structures and may very well undermine their strength and capability to sustain their use. Today with increasing risk to blasts and explosions over building, the need to increase the load carrying capacity of concrete columns and piers over open blasts is highly required.

This study involves the modeling and analysis of the effect of C4 and TNT Blasts on Concrete Filled Steel and FRP Tube Piers using Numerical techniques. The software in use is ANSYS Autodyn, the validation was completed using the Reference paper and the study has been conducted based on varying reinforcement cage configuration and external tube thickness. Further the results were analyzed and more protective designs to short distance blasts were proposed.

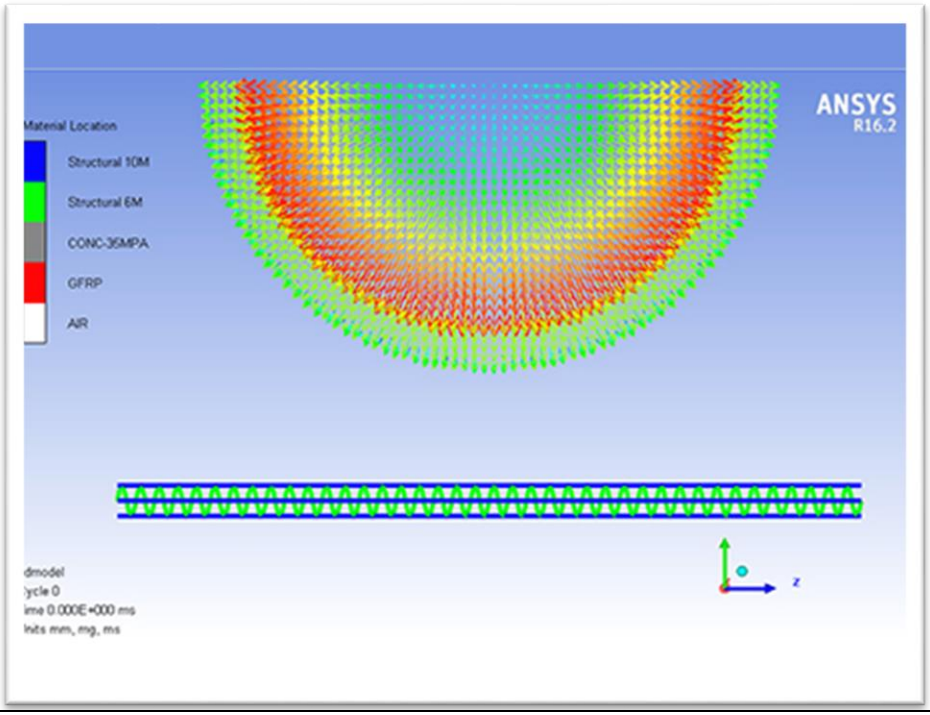

14. Study of TNT Blast response over simple multi-storied buildings

This study proposes to investigate the effect of TNT Explosion over multistoried buildings. The primary objective of this study is to analyze the damage caused by a given explosive mass with respect to the change in position of blast center within the structure. The possibility of progressive collapse of the structure is further considered while analyzing the situation. The building under consideration is a four-room multistoried building with 1-4 stories designed based on the IS Codes for four different test cases.

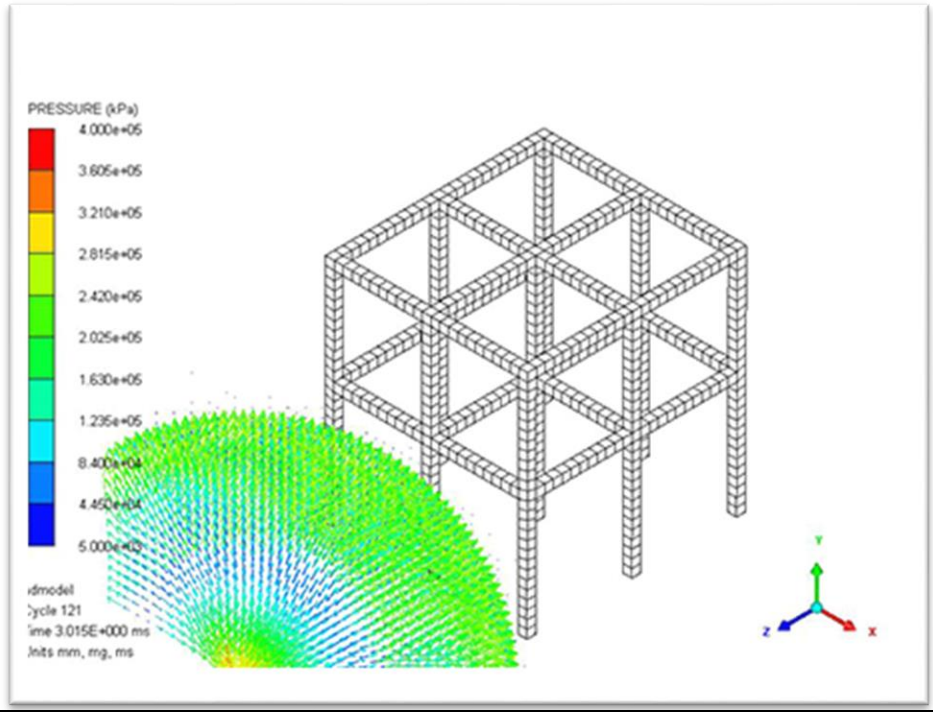

15. Explicit Blast analysis of Reinforced Iso-Lattice Rectangular Columns

With the evolution of isotrusses and their enhanced load carrying capabilities their application has expanded from skeletal load carrying members to reinforcements of concrete columns and beams. Derived from the Iso-trusses is a new concept of Iso-Lattice Web Plates (ILWP) used to reinforce concrete columns.

In this research we are focusing on understanding the ability if ILWP reinforced Concrete Columns to withstand blast loads from C4 Explosives. Three different configurations of these ILWPs have been studied and the results compared with conventional reinforced columns to demonstrate their ability to carry more load.

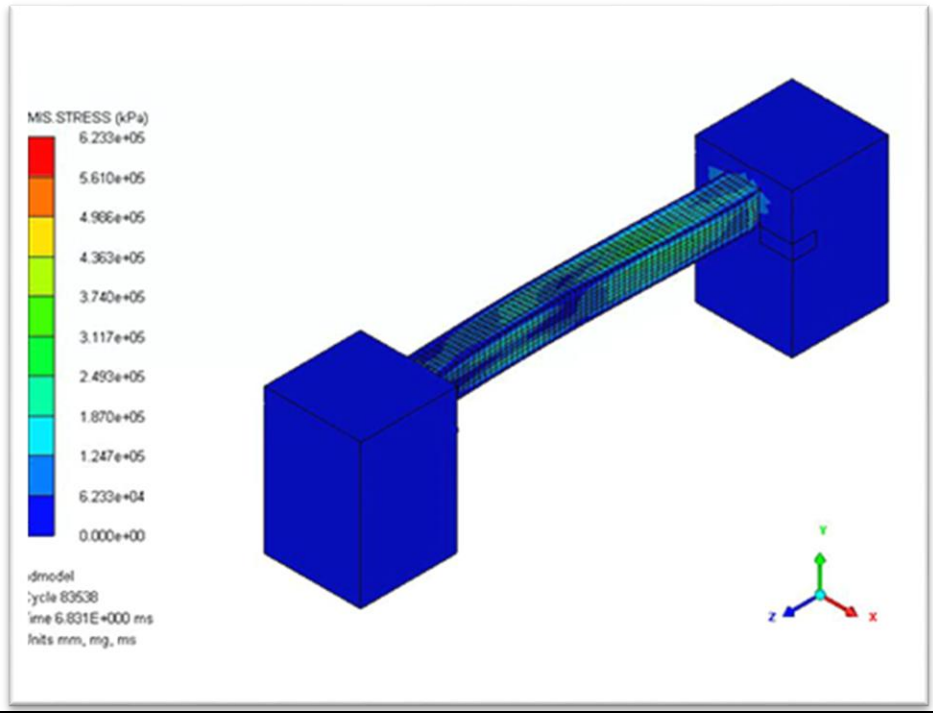

16. Study of Vehicle Collision on Concrete Piers : Kochi Metro Case Study

Highway and railway bridges over roads are subjected to the risk of damages caused by vehicular impact. It seems that the incidents to bridge sub- and superstructures are increasing. Numerous train cars were derailed, and seven people were injured. The derailed cars hit a highway overpass, causing it to collapse.

This research is based over a case study of the Kochi Metro rail project. The behavior of the bridge pier is to be compared to that with a crash barrier provided around the pier during collision. Further study is carried out with HC-FCS pier during vehicle collision. BharatBenz 4023 4x2 model truck of medium and a heavy weight has been simulated to collided with the bridge pier at two different velocities of 70kmph, 110kmph. The peak dynamic forces, displacements and damages were calculated and compared to understand how the current structure stand.

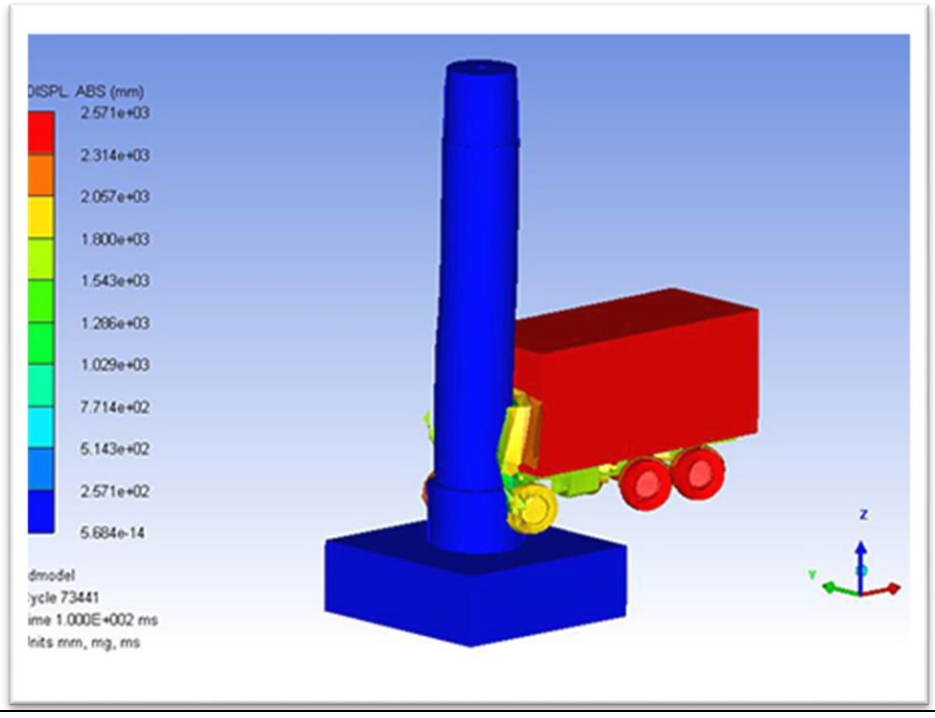

17. Discrete Meteorite impact study on Lunar Structure

Structural concept studies on lunar base have been made during the days of Apollo program since from that time moon is considered to be the most likely place where a home in space could be built for humans. Manned space exploration programs are taking a next step by building permanent bases in lunar surface. Considering the moon's hostile environment construction of such a base would be a herculean task. Then how and in which way these habitable structures could be able to withstand the threats caused by the impact of particles such as meteors?

In this study investigates the effects of impact on a lunar structure with particles of size 100 mm and having properties of a pyroxene meteor travelling at a velocity of 15km/sec. The goal of this research is to provide an extensive and specific technical discussions on particle impact resistance of a lunar structure as applicable to structural engineering.

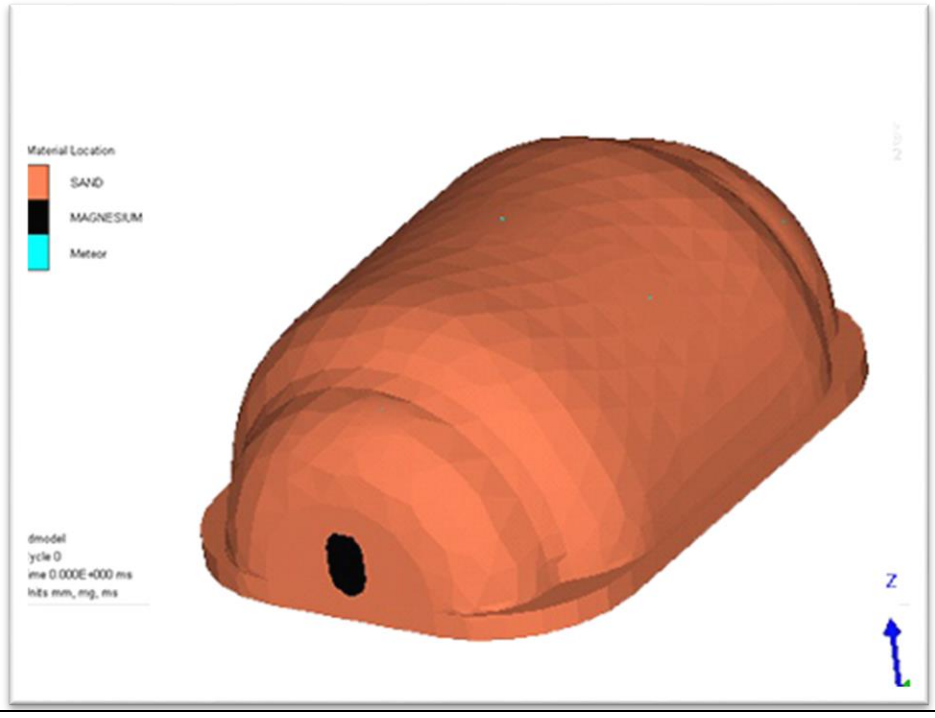

18. Low-Speed Vessel Bridge Pier Impact and study of Incorporating Large-scale Composite Bumper System for protection

Vessel collisions with bridges are increasing at an alarming rate, as more heavy vessels are making more frequent trips under more bridges owing to a variety of factors, such as pilot errors, mechanical failures, and adverse environmental conditions. In case of a vessel collision, bridge damage, destruction, or collapse may be inevitable. Across the globe, 34 major bridge collapses resulted from vessel collision, with a total loss of 342 lives between 1960 and 2002 (AASHTO 2009). Essentially, for bridge spanning navigable waterways, vessel collision presents a serious threat to public safety.

Therefore, it is crucial to design bridge structures capable of withstanding lateral impact loads resulting from a vessel collision which render the construction costly. Alternatively, a protection system may be provided such that failure of exposed bridge members or the occurrence of significant damage is minimized.

This research deals with the applicability of a novel GFRP lattice-web based of Large scale Composite Bumper System(LCBS) developed by Hai Fang et al.(2016), subject to 3000DWT vessel impact. The explicit code of LS-Dyna was used to model the impact.

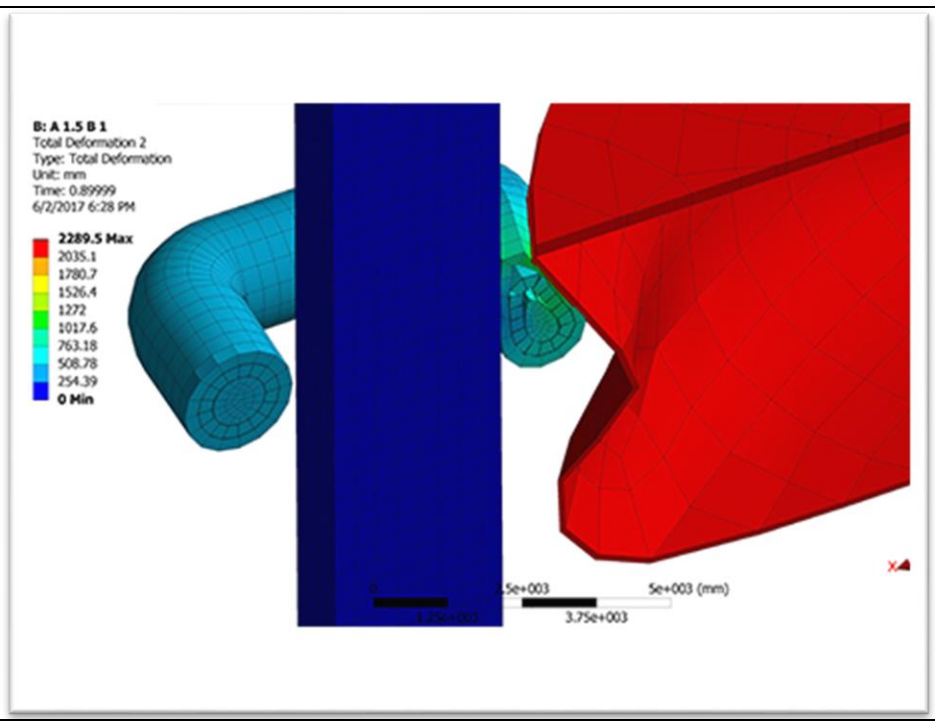

19. Numerical Fatigue analysis of Cold formed Steel Trusses based on Alternating Stress Curves

Cold-formed steel is the common name for products made by rolling or pressing steel into semi-finished or finished components at relatively low or even normal temperatures. Cold-formed steel members have a variety of application, one such application is on truss work. The structural members of the truss are cold formed while generally, the gusset plate is of stainless steel.

This paper deals with the comparison of fatigue life and resistance of 3D cold formed steel trusses subjected to wind with those of the generally used stainless steel trusses. Wind loads acting on these trusses on top of 3 or 4 storied buildings pose a threat to the life of such structures. Further, the effect of bolted and welded connections are also studied with reference to fatigue life throughout this paper.

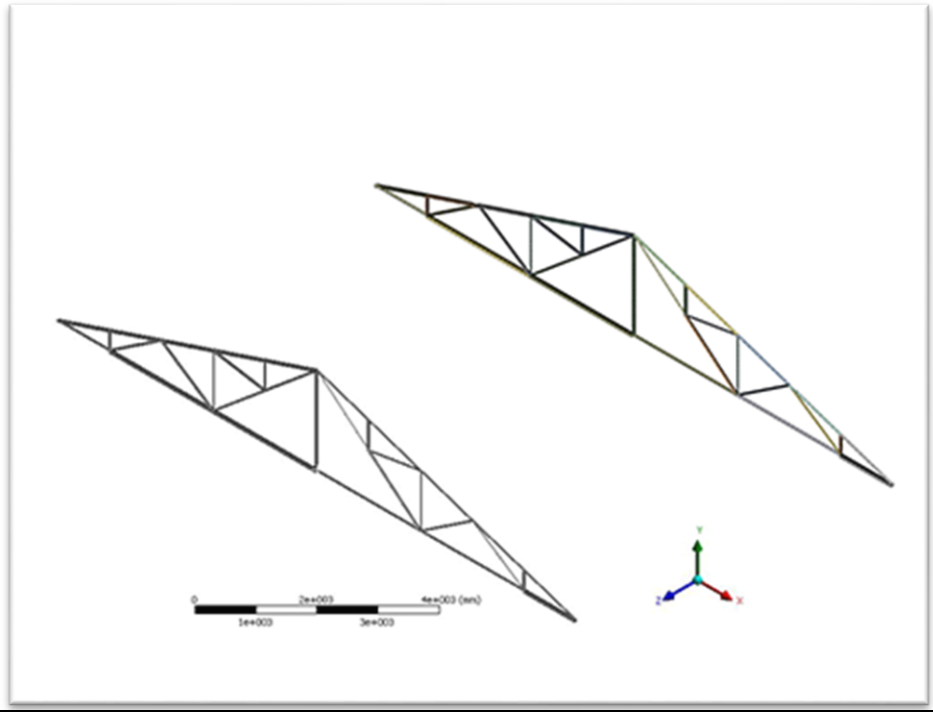

20. Study of Cyclic Behavior of Plain and Corrugated Steel Plate Shear Wall with and without openings

A Steel Plate Shear Wall (SPSW) is a lateral-load resisting system consisting of vertical steel plate infills connected to the surrounding beams and columns and installed in one or more bays along the full height of the structure to form a cantilevered wall. SPSW subjected to cyclic inelastic deformations exhibit high initial stiffness, behave in a very ductile manner, and dissipate significant amounts of energy. These characteristics make them suitable to resist seismic loading.

This work emphasizes on studying the cyclic behavior of SPSWs, with and without central holes, and with corrugated plates under Lateral Cyclic loading.

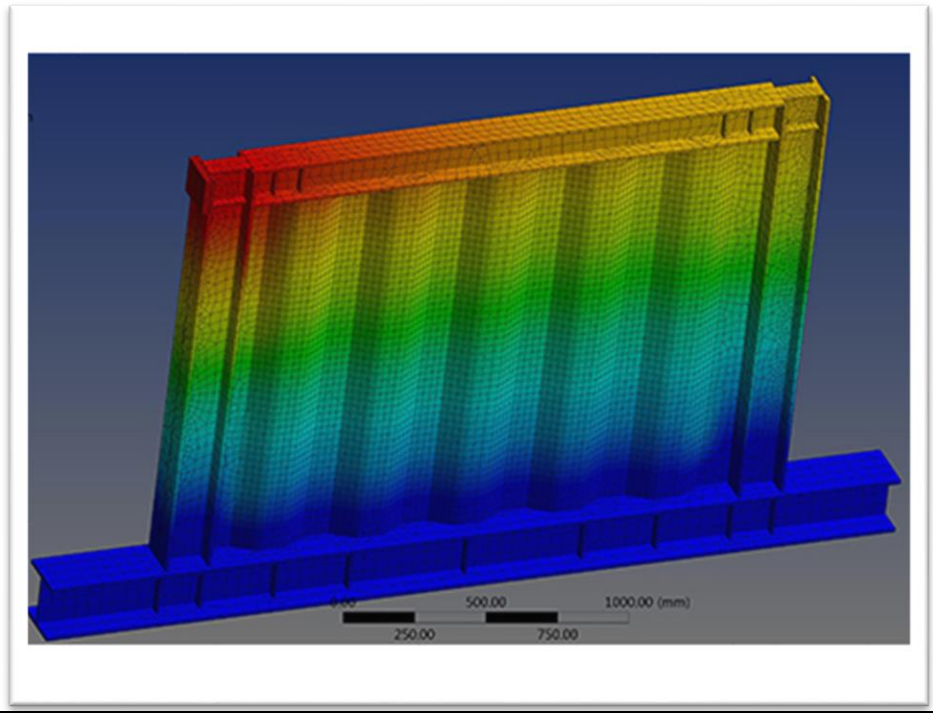

21. Hysteresis Behavior of Steel Plate Shear Walls with various Geometric Perforations

Steel plate shear walls are widely used nowadays because of their resistance to cyclic loads. In this research we analyze the application of a new technology providing slots of different shapes such as circular, triangular and hexagonal in-order to increase their load capabilities. Here the slots are placed inclined to the plate along the diagonal.

Further the study also considers the adoption of a composite steel plate shear wall which consists of a steel plate sandwiched between two concrete panels. These concrete panels provide lateral restrain to the steel plate absorbing the initial loads. The results show that the composite shear wall can withstand cyclic loads better. Moreover, introducing slots in the inner steel plate act as passive energy dissipater and also results in reduction of the total weight and material wastage of the structure.

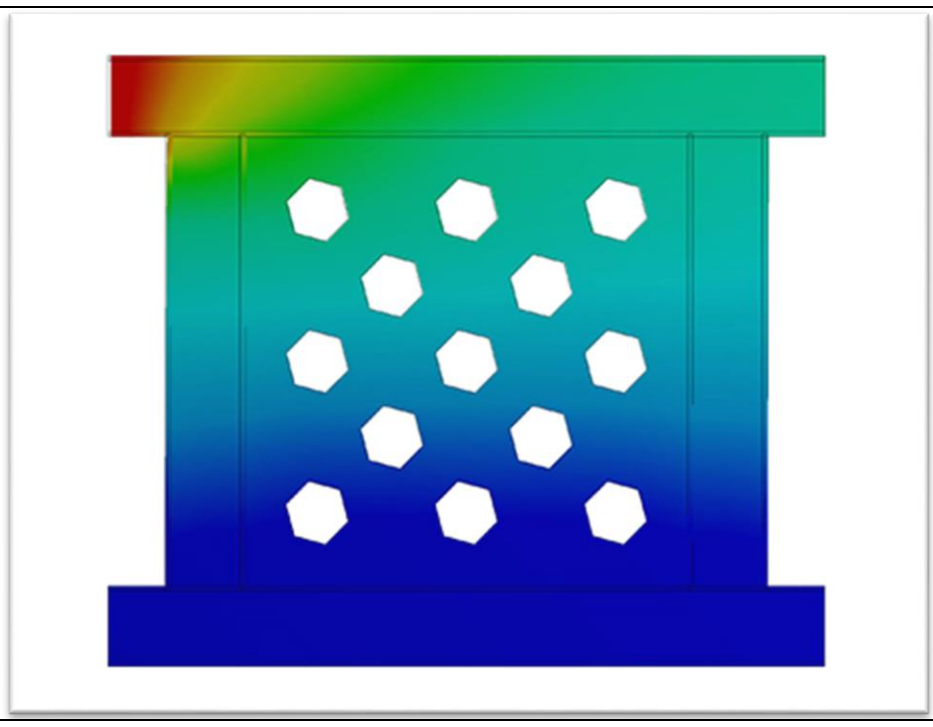

22. Study of Performance of Steel Beam Column Joints with Reduced Beam Sections subjected to Cyclic Loading

A structure is an assembly of various elements or components which are fastened together through some type of connections. The observation of brittle fractures in steel beam-column connections due to earthquakes, numerous studies were deployed to find the best methods in improving the seismic behavior of steel beam-to- column connections. In general, two concepts were introduced for achieving high levels of ductility and assured operation in connections:
(i) Connection reinforcement/strengthening and
(ii) Beam weakening by reducing the cross-sectional area of the beam locally at a certain distance from the connection in order to prevent the catastrophic damage of the connection.
On this weakening the beam instead of reinforcing the connections has proved to be more economical. This research work is to conduct a comparative study of steel beam column connection under cyclic loading with different patterns . This paper investigate the load displacement, ductility and hysteric behavior based on different material property, geometry and loading pattern in FEM software.

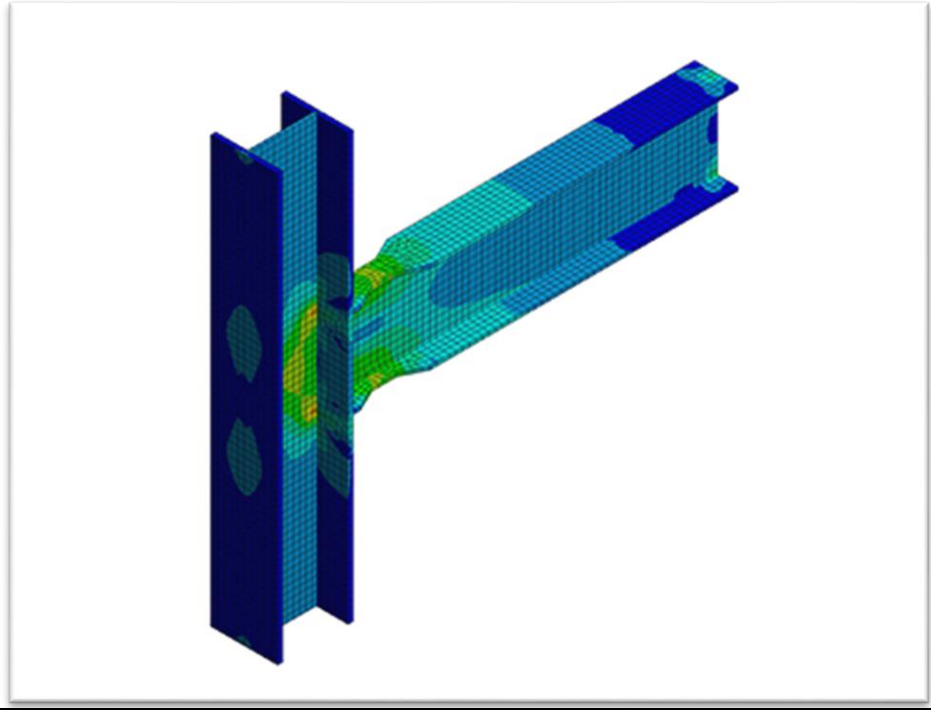

23. Cyclic Behaviour Steel beam-column joints with cylindrical and slit-plate dampers

Experiments and previous studies show that the Beam Column Joints are impacted more in an event of earth quake. Brittle fractures are seen in the joints in most cases. Various studies are conducted on ways to improve seismic resistance of steel frames.

In this paper, the seismic performance of the structure is analyzed by introducing a circular shear damper in the beam column joint. Twenty three cycles of cyclic load are applied to determine the seismic performance. The result is compared with 3 different damper setup in the beam column joint. Even though all the damper setup shows better and stable hysteretic behavior, the circular shear damper showed better seismic performance as compared to the rectangular slit damper.

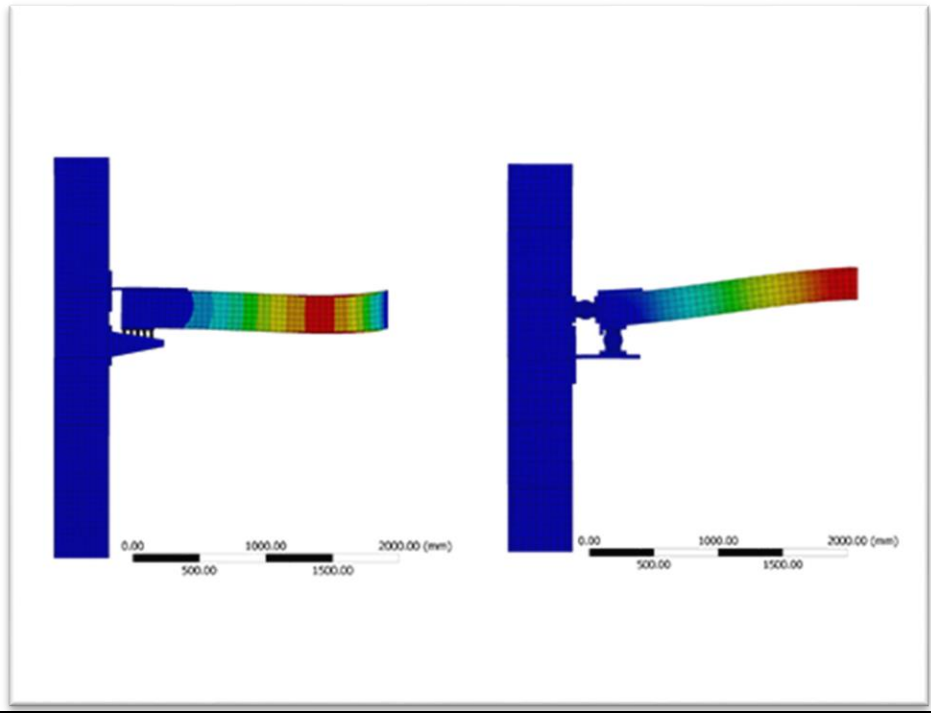

24. Seismic Performance of a Pre stressed Tied Arch bridge Fitted With Dampers

A Tied Arch Bridge is a type of arch bridge in which the outward-directed horizontal forces of the top chord, are carried as tension by the bottom chord. This elimination of horizontal forces at the abutments allows tied-arch bridges to be constructed with less robust foundations. Therefore, tied arch bridges can be situated atop elevated piers or constructed in areas having unstable soil. Since the structure do not depend on horizontal compressive forces for its integrity, tied-arch bridges can be prefabricated offsite, and subsequently assembled at site.

This paper investigates the dynamic response of a pre stressed bowstring reinforced concrete (RC) type arch bridge under seismic loading. The bridge named as New Kozhencherry Bridge, Kerala, India selected for the study, is a proposed work of the Public Works Department, Kerala.
This paper deals with static analysis and seismic analysis of the bridge with and without the provision of a damping systems and comparison of the results. The study presented in this paper are a possible suggestion for design improvements to the structure under consideration.

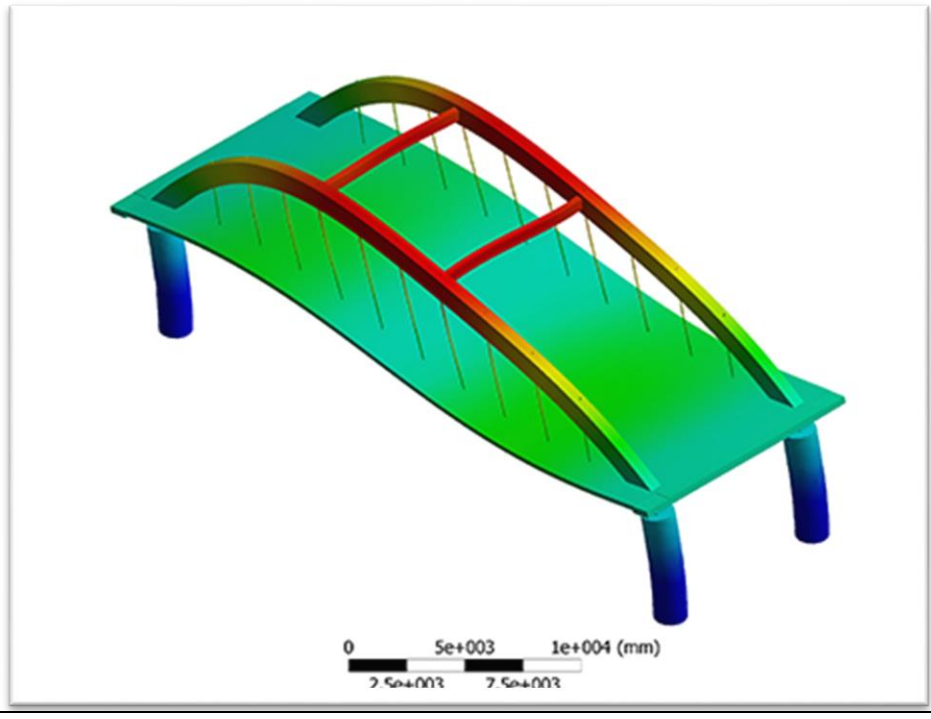

25. Seismic Response Spectrum analysis on Paneled Water tank modeled using Acoustic Elements

Earthquakes create some of the most violent loading conditions that a structure can be subjected to and if a structure fails under these loads then inevitably human life is put at risk. One of the most common methods by which a structure fails under seismic loading is at the connection of structural elements. From the references we can learn about a novel method of replacing the conventional water tanks using interlocked panels.

The main objective of this study is to understand the seismic response of the two types of water tank structures, at different water levels and subjected to two different seismic response spectrum analysis. The Natural mode frequencies have been compared to validated the system with the reference journals.

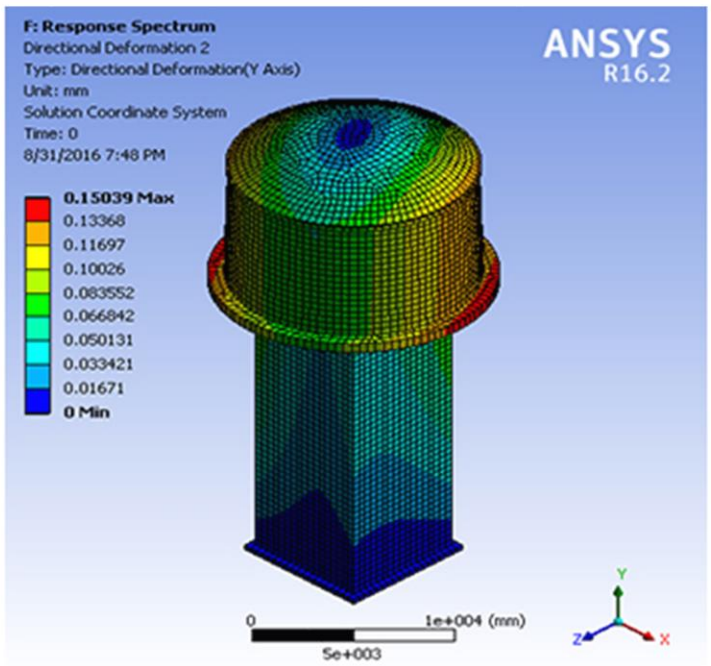

26. Comparison of Monopile and Tripod offshore Structures using Numerical Methods : A Case Study

The current paper emphases the use of the available structural code to identify the loads acting at different heights as a function of both height and windspeed. Further the water load acting over the pile also is calculated based on the similar factors.

Realistically it may not be the case to assume wind or water based pressure loads as point loads. Hence in this study we propose to model the soil structure interaction of the monopile, with reference to the results found using FEA coupled with CFD and further using the pressure data from to model the interactions.

Further the study is taken forward by using Mohr-Coulomb plasticity Criterion modified to Drucker Prager model, to understand Soil Structure Interactions and the descent of the structure into the soil.

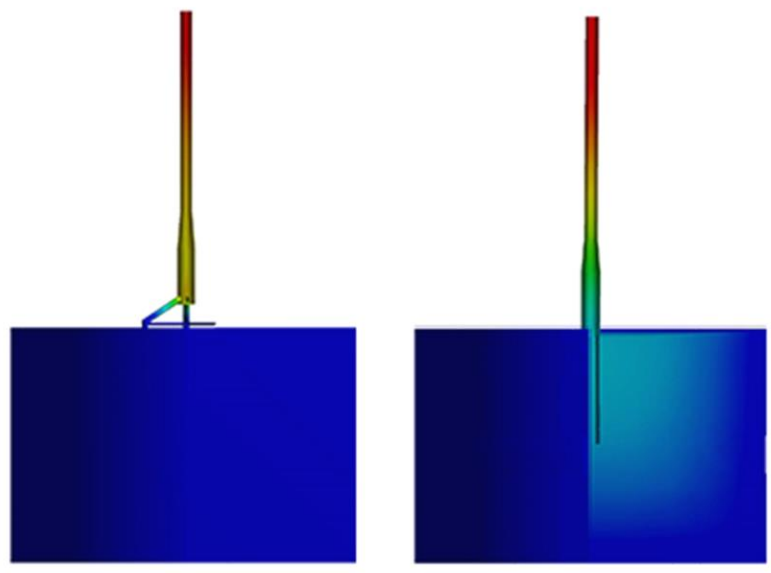

27. Soil-pile Interaction And Load Bearing Capacity Of Concrete Screw Pile Using Drucker Prager Yield Criteria

Piles are generally long slender foundation members used for stability and to transfer loads of the structure to deep soil. Pile foundations for different buildings and structures come in a wide range of material, sizes, shapes based on their ability to transfer load and their interaction with the surrounding soil type.

In this research we demonstrate the ability of reinforced concrete screw piles to anchor and hold structures at a shorter depth as compared to the straight pile. A detailed parametric analysis is carried out to understand the behavior of screw piles with variation in geometry and under diverse soil conditions, in the absence of standard codes of design.

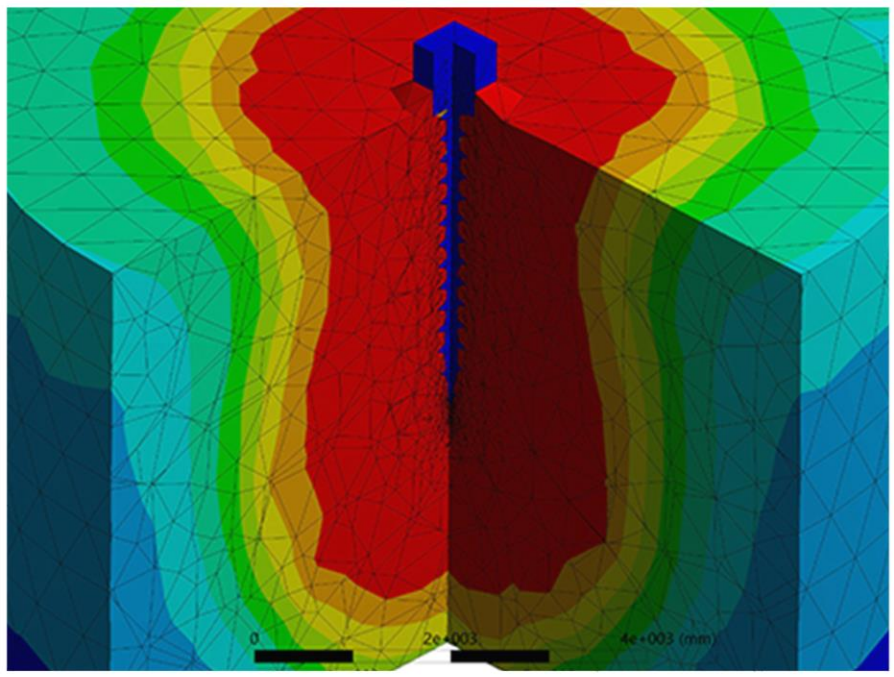

28. Optimizing Structural Load Bearing Capacity of Transmission Tower using Genetic Algorithm

Transmission towers are used to connect power grids over long distances. These structures are capable of holding the cables at safe height with a large amount of electricity being transported.

The study involves using genetic algorithm to select different cross section profiles for each member of a given transmission tower and calculate the net generated stresses while with the least amount of material usage. The modeling was done using 2-D beam element which was assigned different cross sections, and subjected to lateral wind as well as cable tension loading.

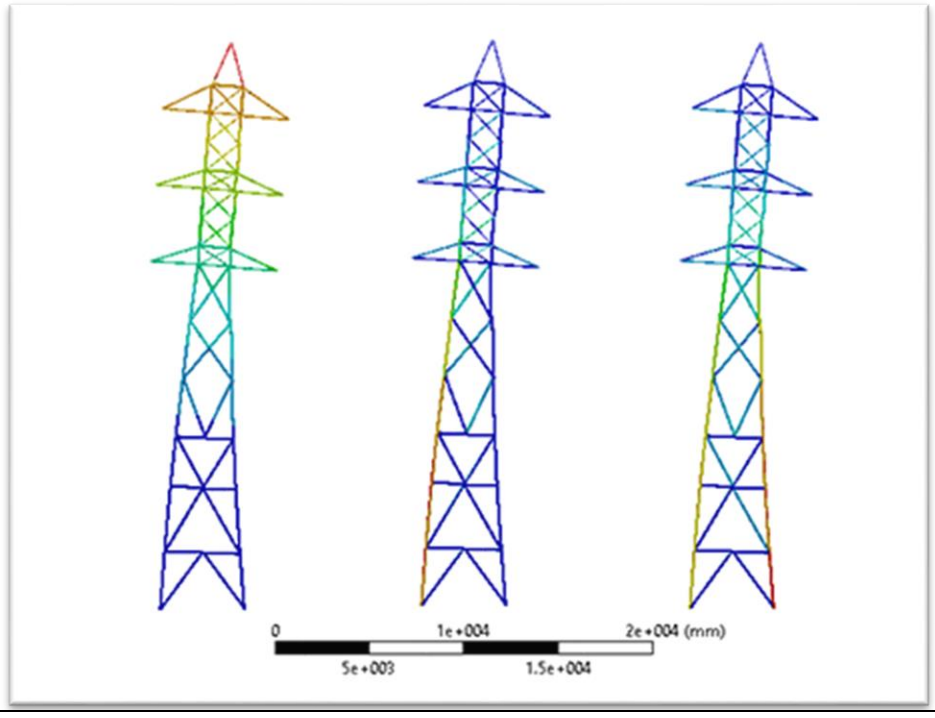

29. Design and Topological Optimization of Piston Connecting Rods for Material Economy

This project focuses on using the methodology of Topological optimization to design and optimize a connecting rod for application in a Mercedes OM 646 Engine.

The iterations are performed based on the transient stresses generated during the engine operation while a light weight Aluminum alloy has been chosen as the base material.

Further the designed and topologically optimized connecting rod has been compared with the currently employed standard connecting rod and analyzed for strength and stiffness.

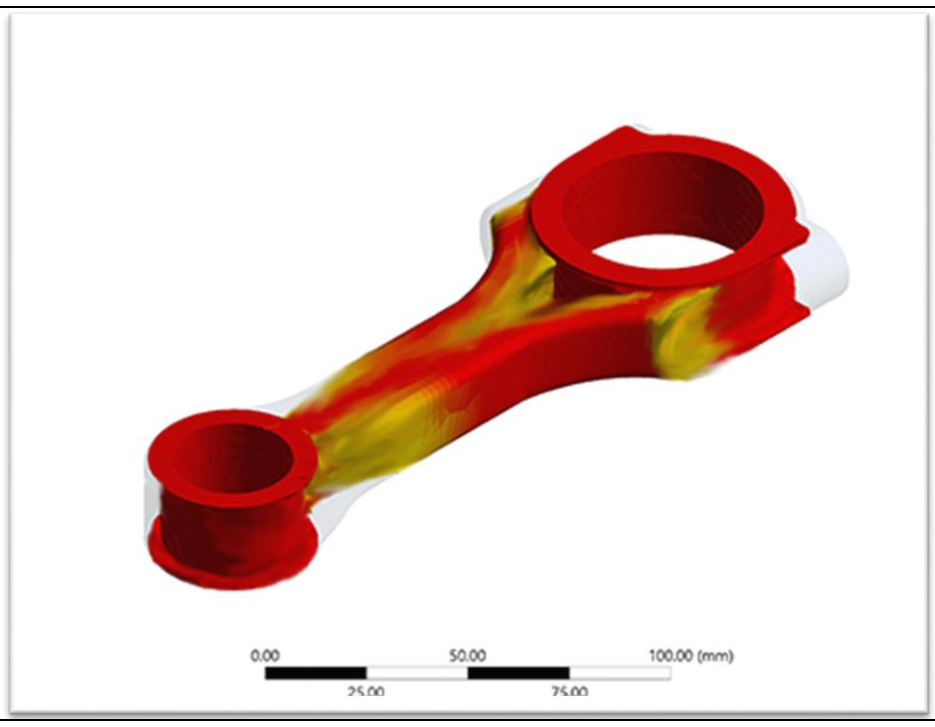

30. Topological Optimization of Concrete Dome Structures Under Static and Dynamic Loads

This paper studies the application of topology optimization procedure for optimizing a given concrete structures. The main objective aims at reducing the weight of concrete used in structures, thereby minimize the negative impact of cement production on the environment. Effectively we find the best use of material for the structure such that the objective criterion of compliance presents a minimum value subject to given volume reduction constraints.

Four standard dome models of different geometries were modeled and the Mechanical APDL code was used to optimized the structure. Consequently the results compared based on generated stresses and structural stiffness.