Dr. Marin Čikeš

A SHORT RESERVOIR STIMULATION COURSE

RESERVOIR STIMULATION

INTRODUCTION

Reservoir stimulation deals with well productivity. As a result, a successful stimulation first requires accurate identification of parameters controlling well productivity and the determination of whether or not stimulation can improve production. This is therefore the very first step of the stimulation job design.

RADIAL FLOW

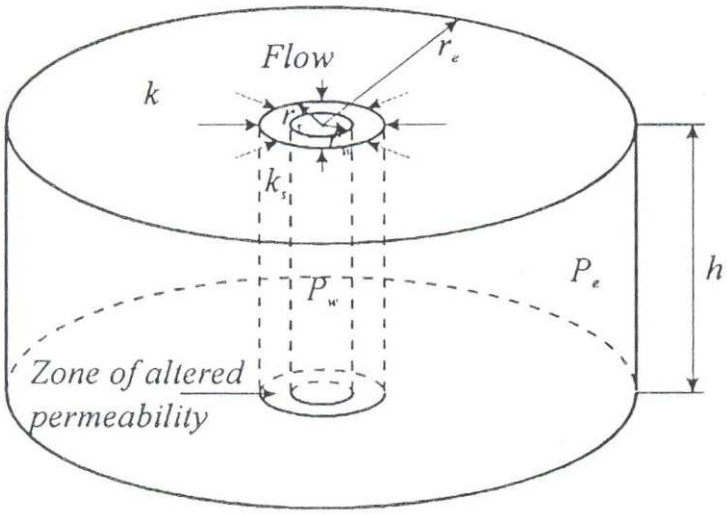

- *Undamaged well:* $k_s = k$

$$P.I. = \frac{2\pi kh}{B\mu \ln \frac{r_e}{r_w}}$$

- *Damaged well:* $k_s < k$

$$\frac{P.I._s}{P.I.} = \frac{\frac{k_s}{k}\log\frac{r_s}{r_w}}{\log\frac{r_s}{r_w} + \frac{k_s}{k}\log\frac{r_e}{r_s}}$$

$$S = \left(\frac{k}{k_s} - 1\right)\ln\left(\frac{r_s}{r_w}\right)$$

$$r_{wekv} = r_w e^{-s}$$

Figure 1
Well and zone of altered permeability.

Darcy's law in its simplest form is adequate to study the issue (Fig. 1). A familiar expression (for steady-state and in a radial reservoir) is written as

$$q = \frac{2\pi kh\left(p_e - p_w\right)}{B\mu\left(\ln\frac{r_e}{r_w} + s\right)} \tag{1}$$

where skin factor, s, is given by

$$s = \left(\frac{k}{k_s} - 1\right)\ln\frac{r_s}{r_w} \tag{2}$$

Each of the variables on the right-hand side of Eq. 1 affect well productivity and certain action may favorably change these effects. Of particular interest to the stimulation engineer are the permeability and the skin effect. Both of these variables can be obtained from a pressure transient test of the candidate well. Ignorance of these two variables would result not only in a less than optimum design, but more importantly it would render the post-treatment analysis and job evaluation impossible.

LINEAR FLOW

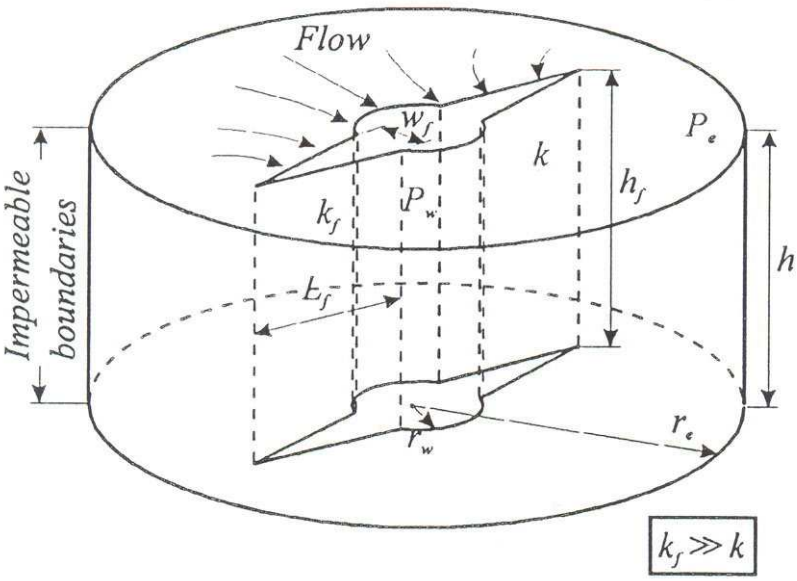

M. Prats: $r_{wekw} = 0.5L_f$

$$\frac{P.I._t}{P.I.} = \frac{\ln\frac{r_e}{r_w}}{\ln\frac{r_e}{0.5L_f}}$$

Assumptions: *1.* $FC = w_f k_f = \infty$

2. Steady-state flow

3. Incompressible fluid flow

Figure 2

Geometry of hydraulic fracture.

As can be easily seen, a low value of the permeability or high value of the skin factor would result in low well productivity. **Matrix acidizing** is generally applied to reduce a large skin resulting from permeability damage during completion or production. There is virtually nothing practical that can be done to the permeability, although investigators have erroneously suggested that hydraulic fracturing increases the reservoir permeability. **A hydraulic fracture**, as it will later be shown, is a superimposed structure on a reservoir which remains largely undisturbed outside of the fracture. The fracture, however, can greatly improve the well productivity by crating a large contact surface between the well and the reservoir (Fig. 2). The production improvement results from effectively increasing the wellbore radius, which is indicated in subsequent testing as a reduction in the skin factor, generally to negative value. Eq. 1 may be rewritten using the concept of *effective* wellbore radius, r_w',

$$r_w' = r_w e^{-s}, \tag{3}$$

and thus

$$q = \frac{2\pi kh\left(p_e - p_w\right)}{B\mu \ln \frac{r_e}{r_w'}}. \tag{4}$$

For *infinite* fracture conductivity, i.e.

$$F_{CD} = \frac{k_f w}{k x_f} > 10, \tag{5}$$

effective wellbore radius is given by

$$r_w' = \frac{x_f}{2}, \tag{6}$$

so, for such case, Eq. 1 can be written as

$$q = \frac{2\pi kh\left(p_e - p_w\right)}{B\mu \ln \frac{2r_e}{x_f}}, \tag{7}$$

and the resulting skin factor an be calculated as

$$s = \ln \frac{2r_w}{x_f}. \tag{8}$$

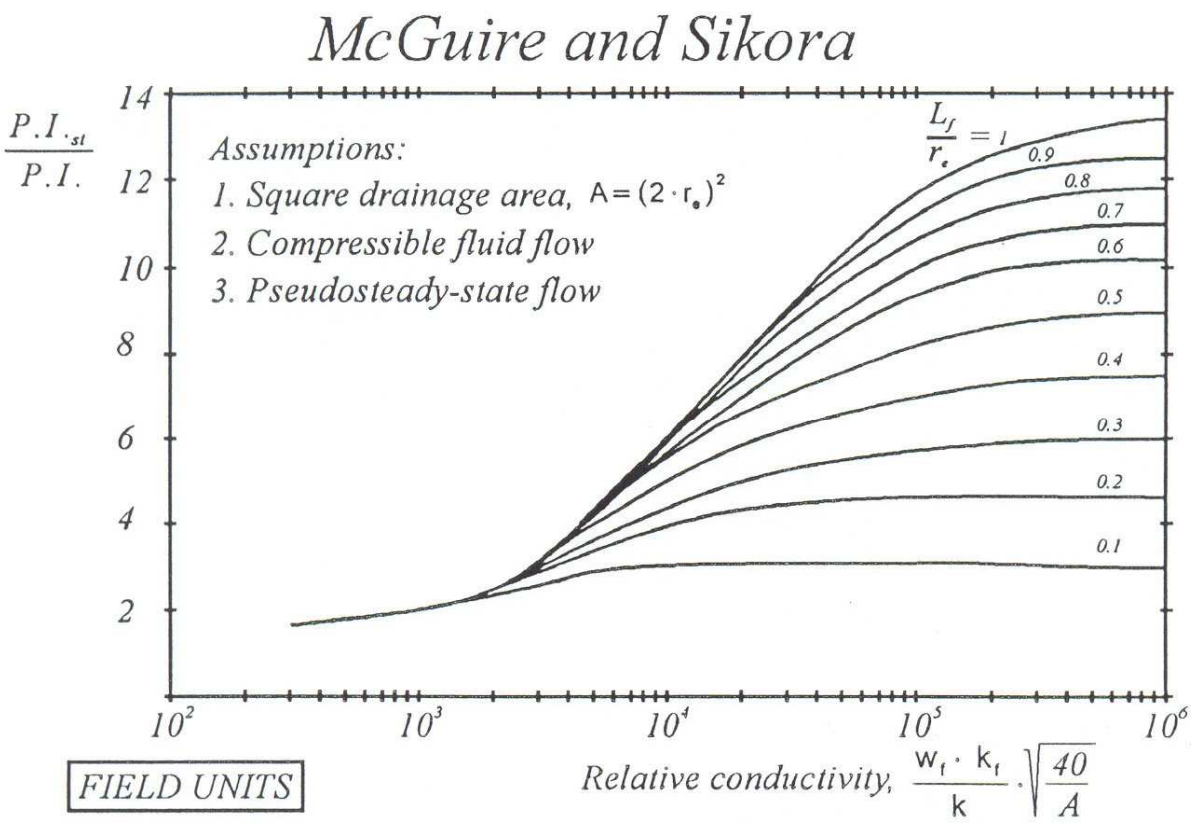

Figure 3

In case of finite fracture conductivity, for pseudo steady-state flow, productivity increase can be found in Fig. 3. But, in lower-permeability reservoirs with long fractures, pseudo steady-state is not achieved until considerable time was passed. Until this time (which we can call time to stabilized flow), the chart in Fig. 3 is not applicable for analysis of productivity-index increase. Instead, the unsteady-state flow before stabilization must be taken into account. Fig. 4 presents results of calculations for such example, for constant flowing pressure case. Note that productivity stabilizes in les than 1 day for k = 100 md but requires almost 10,000 days (27.4 years) to stabilize for k = 0.01 md. A modern finite-difference reservoir simulator is preferable for such kind of calculations, although type curves can be used (Fig. 5).

All stimulation practices adjust the skin; however, determining the cause of a large skin is not as simple as it may appear. The skin effect is not just due to damage, but instead, it is a multicomponent variable for which stimulation may not affect all of the components. The total skin effect may then be written as

$$s_t = s_{c+\theta} + s_p + s_d + \Sigma p\text{skins}\,. \tag{9}$$

The last term in the right-hand side of Eq. 9 represents a large array of pseudo skin factors, such as phase-dependent and rate-dependent effects. The other three terms constitute the usually important skin factors. The first represents the skin effect due to partial completion and slant. The second term represents the skin effect due to perforations and finally, the third term refers to the damaged skin effect,

which is given by Eq. 2. Identification of the individual components of the skin effect is therefore important in the pretreatment design stage.

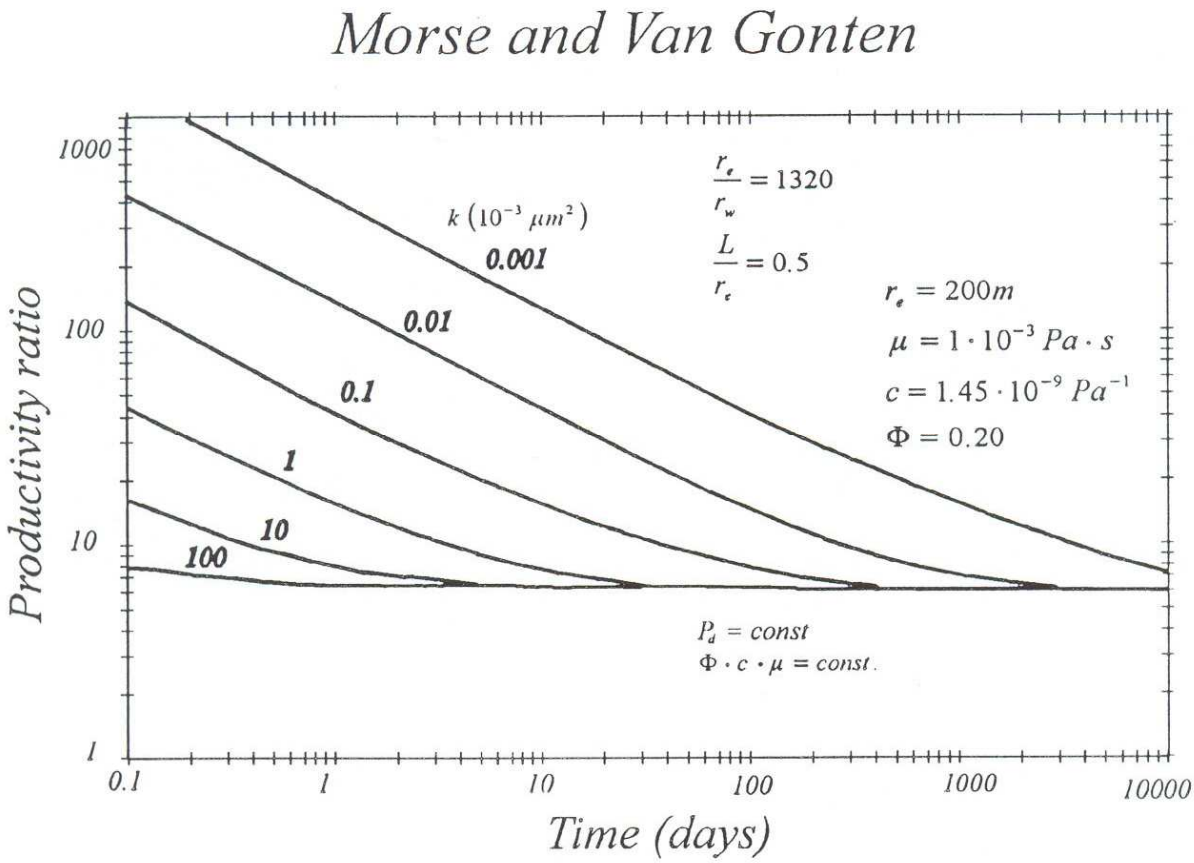

Figure 4
"Relative" productivity ratio vs. real time for different permeabilities.
Constant pressure case.

Matrix Acidizing by removing damage around the immediate area of the wellbore reduces only that portion of the skin effect caused by damage. This, while substantial, would generally not increase the well productivity above that for the flow potential for the well with a zero value of skin (Fig. 6).

On the other hand, **Hydraulic Fracturing**, in appropriate reservoirs can increase both immediate and sustained productivity by a margin far greater than that indicated by Eq. 1 with a zero value of skin. The measure of success, as it is shown in Eq. 5 and will be explain later, depends on the magnitudes of the formation permeability, the fracture conductivity, and the fracture length. The fracture conductivity in particular provides the important permeability contrast to that of the reservoir. The larger the ratio of fracture conductivity, permeability width product to that of the virgin reservoir (taking into account the geometry of the generated fracture) the higher the productivity increase.

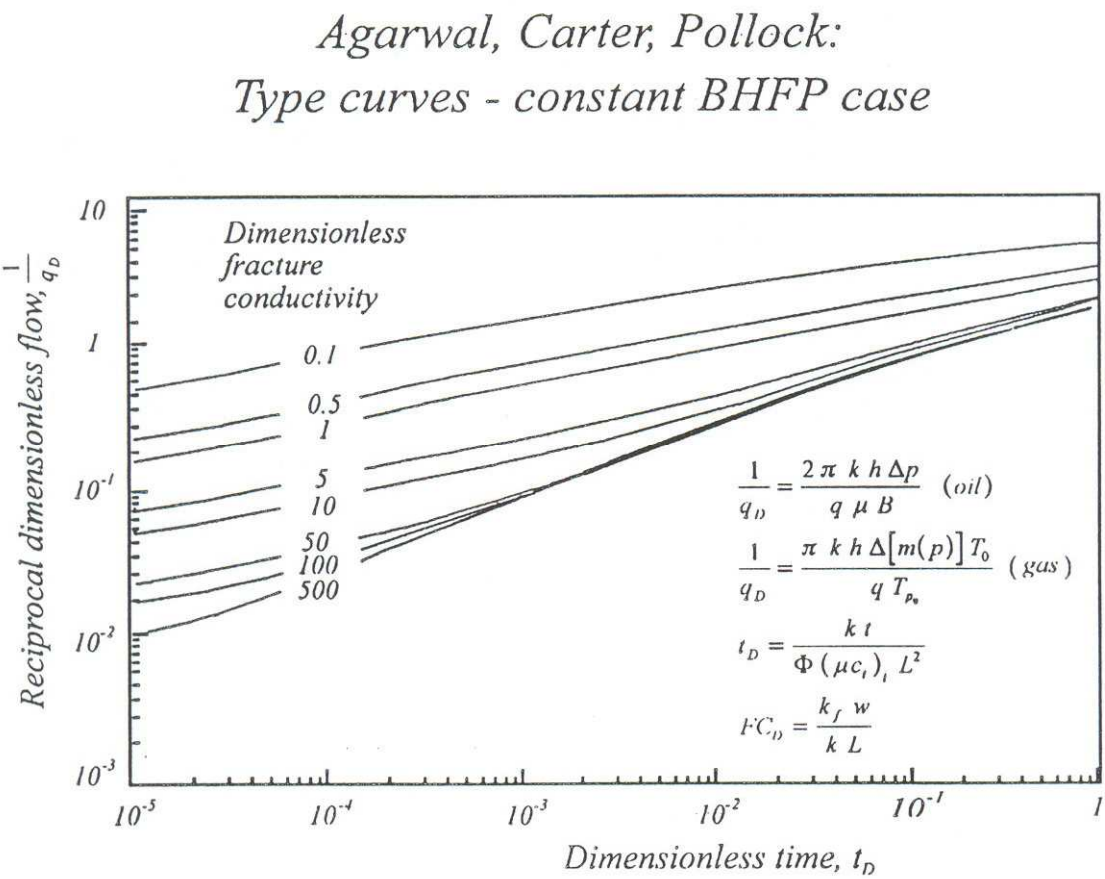

Figure 5

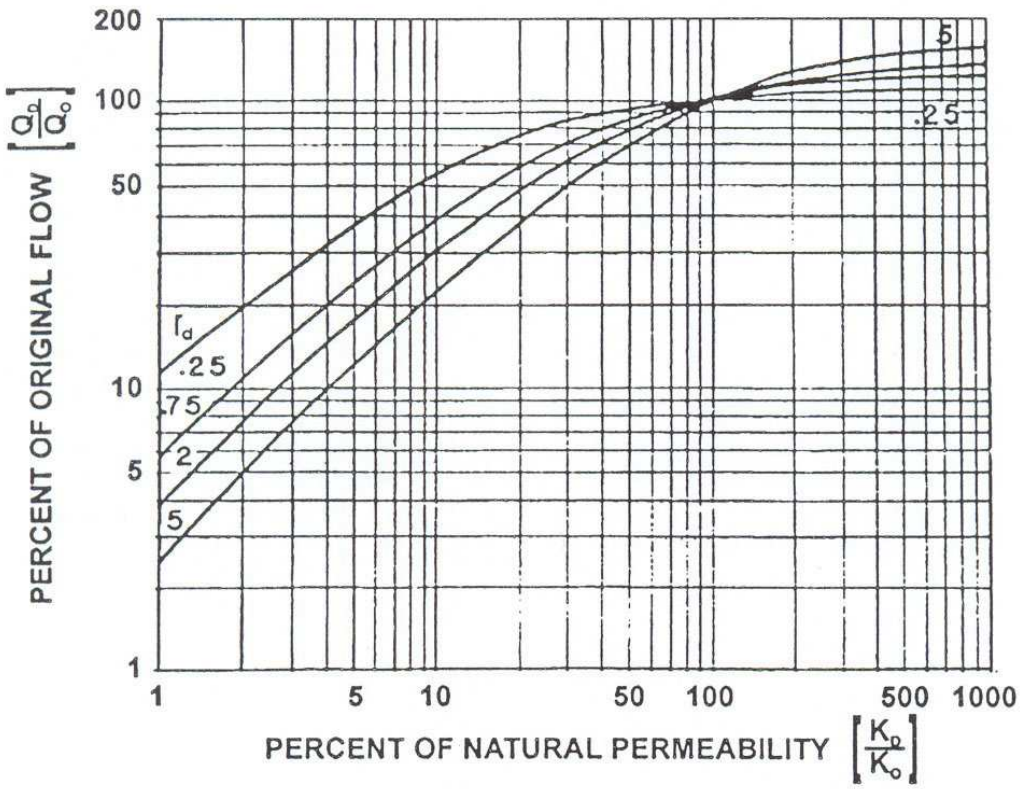

Figure 6
The effects of natural permeability changes on radial flow.

HYDRAULIC FRACTURING TREATMENT

Mechanics of Hydraulic Fracturing

A theoretical examination of the fracturing of rocks by means of pressure applied in boreholes leads to the conclusion that, regardless of whether the fracturing fluid is of the penetrating or non-penetrating type, the fractures produced should be approximately perpendicular to the axis of least stress (Fig. 7). The general state of stress underground is that in which the three principal stresses are unequal. For tectonically relaxed areas characterized by normal faulting, the least stress should be horizontal; the fracture produced should be vertical with the injection pressure less than that of the overburden. In areas of active tectonic compression, the least stress should be vertical and equal to the pressure of the overburden; the fracture should be horizontal with injection pressure equal to or greater than the pressure of the overburden.

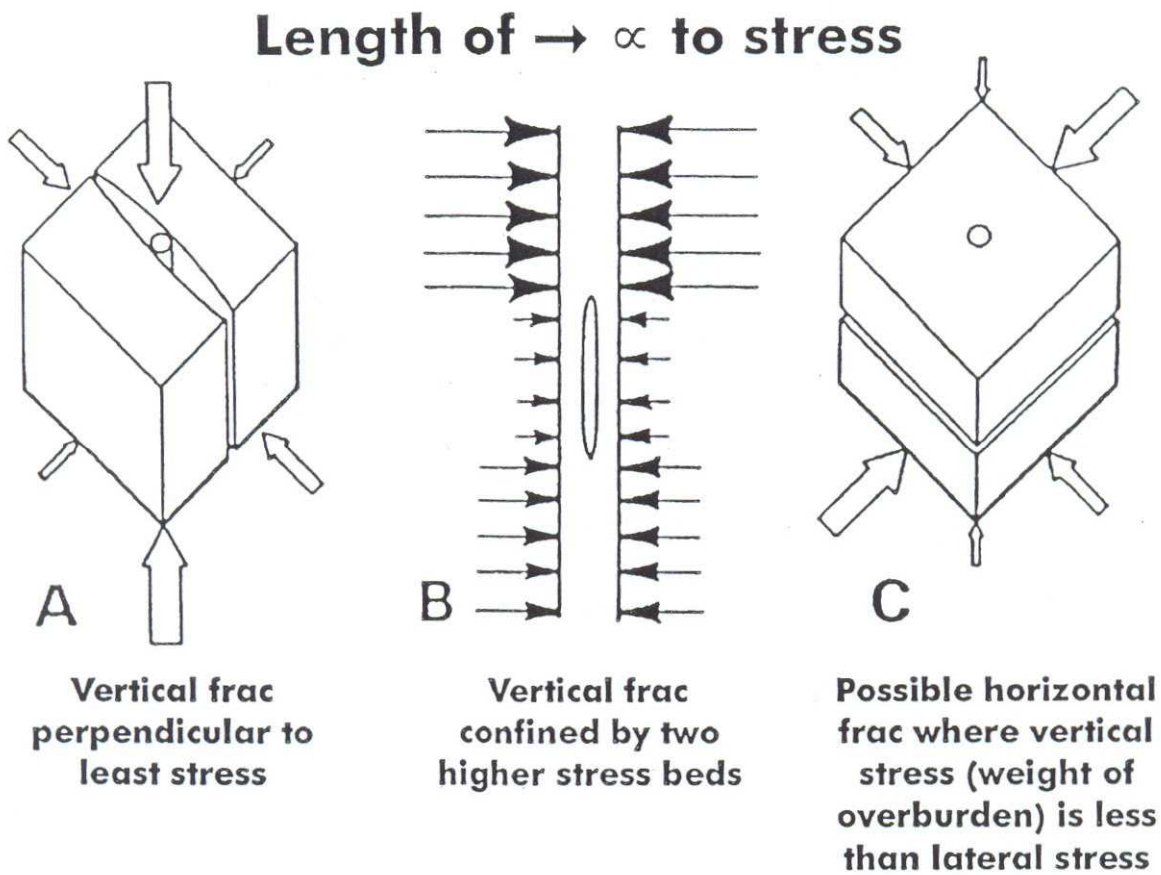

Figure 7
Effects of stress fields on fracture propagation.

The theory of hydraulic fracturing depends on an understanding of crack behavior in a rock mass at depth. Because rock is predominantly a brittle material, most efforts to understand the behavior of crack equilibrium and growth in rocks have relied on elastic, brittle fracture theories. Based on this theory, equilibrium conditions in homogeneous, infinite rock are given by

$$\left(p_f - \sigma\right) = \sqrt{\frac{\pi E \gamma}{2\left(1-\nu^2\right) r}} \,. \tag{10}$$

This failure criterion is not suitable for hydraulic fracture applications because of the unrealistic loading condition of constant pressure throughout the entire crack. Only crack with very small radius or very low pressures would be stable under these conditions. A modification, which accounts for more reasonable loads, forms the basis for two different mathematical models for fracture propagation in confined rock (reservoir).

Modeling of Hydraulic Fractures

The need to predict the behavior of a system, or to interpret its past response, leads to an attempt to describe its structure, and to develop a model which could be used as a prediction or interpretation tool. In general, a system can be described by an external observer as a set of inputs and a set of measurable outputs. An engineering diagram is given in Fig. 8; the problem is often to predict the values of outputs or response corresponding to given action, or to maintain them at a described level. Modeling describes the content of the "box" in Fig. 8 with enough accuracy to allow a reasonable prediction or control of the system.

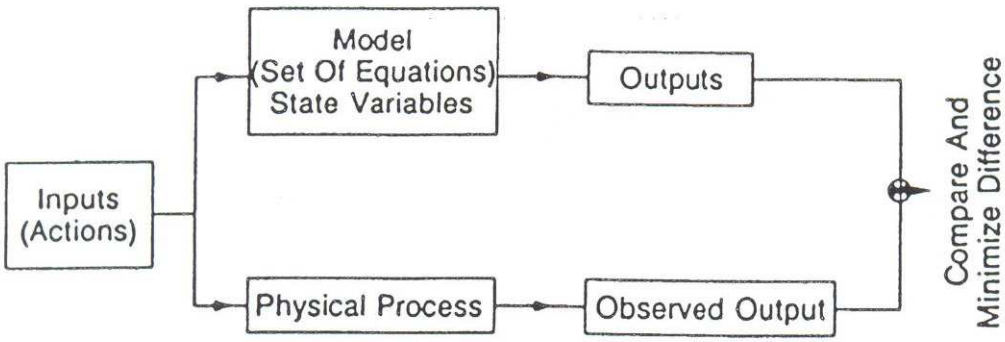

Figure 8
Modeling process philosophy.

A more complete picture is shown in Fig. 9, where we want to control the process by measuring some of the system parameters and thus achieve the desired treatment.

For stimulation treatments, modeling the content of the box involves a blend of different components such as rock mechanics, fluid mechanics, rheology, heat transfer and reaction kinetics. Two sets of laws are required:

- fundamental laws (mass, momentum, and energy conservation), and
- constitutive laws.

The first set of laws relates to physical principles; the second set includes the rock elasticity and fluid rheology and describes the behavior of a system under a certain number of conditions. The laws are derived from physical assumptions, or from a fit of experimental observations.

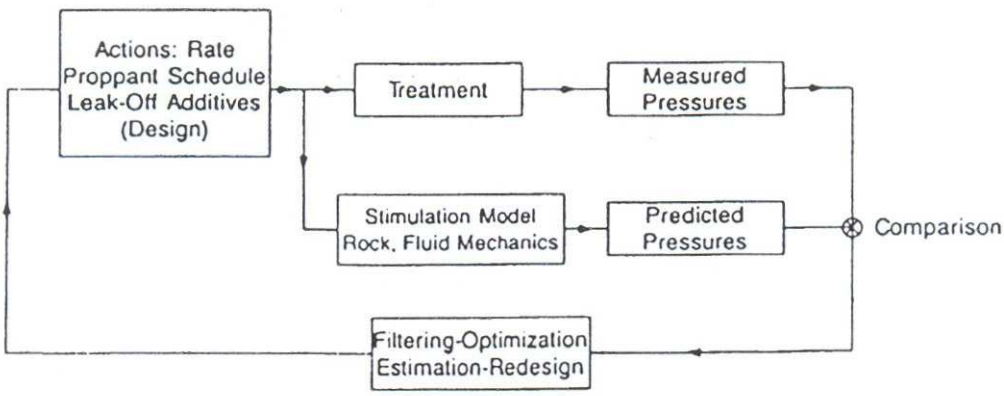

Figure 9
Use of modeling in stimulation design and monitoring.

Coupling these two sets of equations with the appropriate "boundary conditions", which typically represent the external actions, results in a very complex mathematical formulation. To solve the coupled problem, a discretization of the domain or its boundary (such as the reservoir of fracture) is necessary, as well as writing the equation in a form that can be solved with digital computing. Sophisticated numerical techniques have been developed during the last 15 years to simulate the propagation of fractures, or to represent multiphase flows in the reservoir. Along with some analytical derivations, these techniques have provided powerful tools to design stimulation treatments.

Two-Dimensional Fracture-Propagation Models

A mathematical fracture propagation model is indispensable to relate injection rate, time of treatment and fluid leakoff, with fracture dimensions – i.e., width and length. Together, fracture dimensions and leakoff as a function of time form the basis for proppant and fracturing fluid scheduling.

Two-dimensional (2D) models require that the fracture boundary in the plane of propagation be specified in advance. Models that assume a rectangular extension mode are widely used. The consequences of using a radially expanding fracture mode have also been examined.

For plane-strain conditions, England and Green derived an equation for the width of a line crack between $x=-L$ and $x=+L$ (or $z=-\frac{1}{2}h_f$ and $z=+\frac{1}{2}h_f$) opened by an equal and opposite normal pressure distribution on each side of the crack as exerted by a fluid. Assuming a symmetrically distributed in-situ normal stress, σ, and the most simple case of a uniformly distributed load, p_f, over the full fracture length ($2L$), this equation is

$$w(x)=\frac{4\left(1-\nu^2\right)L\left(p_f-\sigma\right)}{E}\sqrt{1-x^2} \tag{11}$$

One can substitute z for x and h_f for $2L$. In the first case, one considers fracture length as measured from the well for plane-strain conditions, which forms the base for the **Khristianovitch-Geertsma de Klerk Model (KGD)** (Fig.10). In the second case, one considers total fracture height and assumes plane-strain conditions in the plane perpendicular to propagation, what is the base for the **Perkins-Kern-Nordgren Model (PKN)** (Fig. 11). Coupling of both conditions is not allowed.

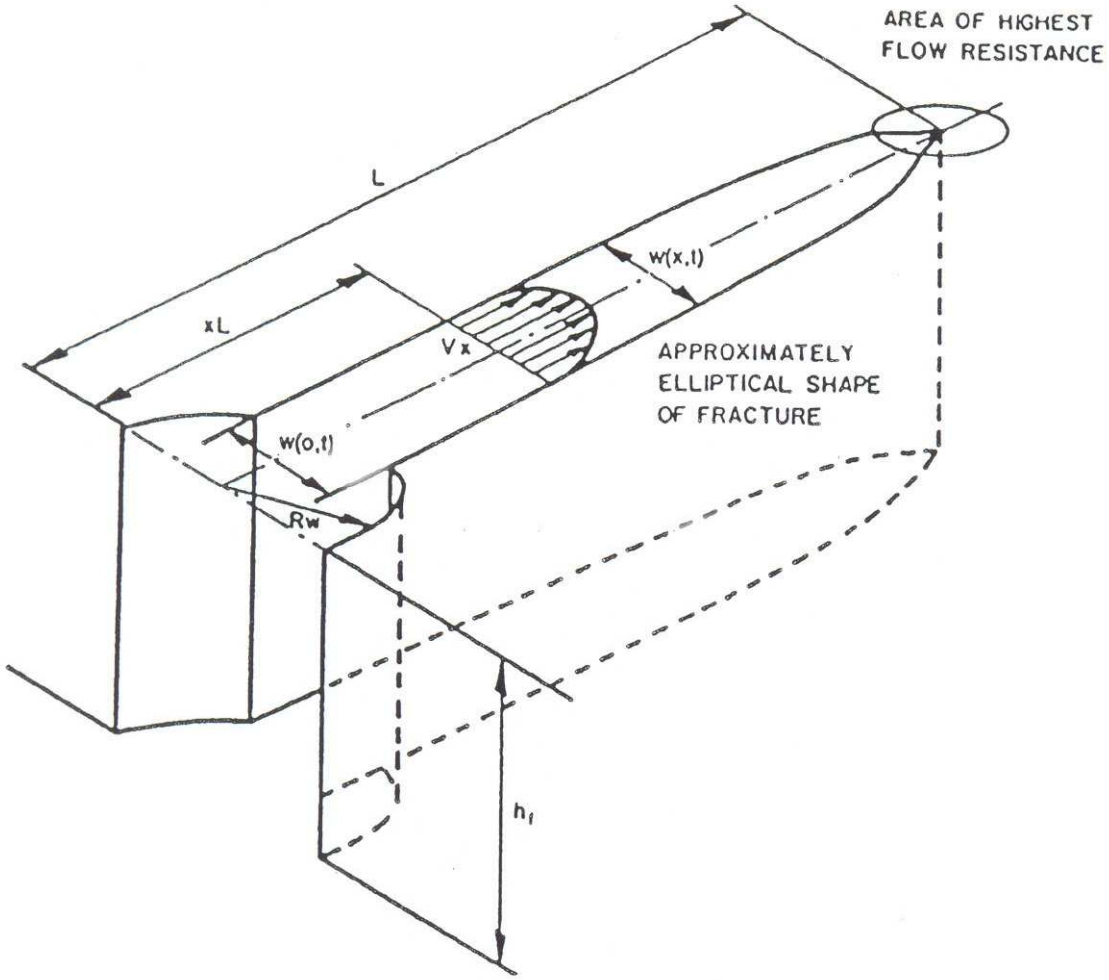

Figure 10

Schematic representation of linearly propagating fracture with laminar fluid flow according to Geertsma and de Klerk.

The excess pressure Δp (in excess of σ) distribution along the fracture is related to the fluid-flow rate. Then, for a Newtonian fluid, maximum fracture width is given by

$$w(0,t) \propto \sqrt[4]{\frac{\left(1-\nu^2\right)\mu q_i L^2}{E h_f}}, \tag{12}$$

and

$$w(0,t) \propto \sqrt[4]{\frac{\left(1-\nu^2\right)\mu q_i L}{E}} \tag{13}$$

for KGD and PKN model respectively.

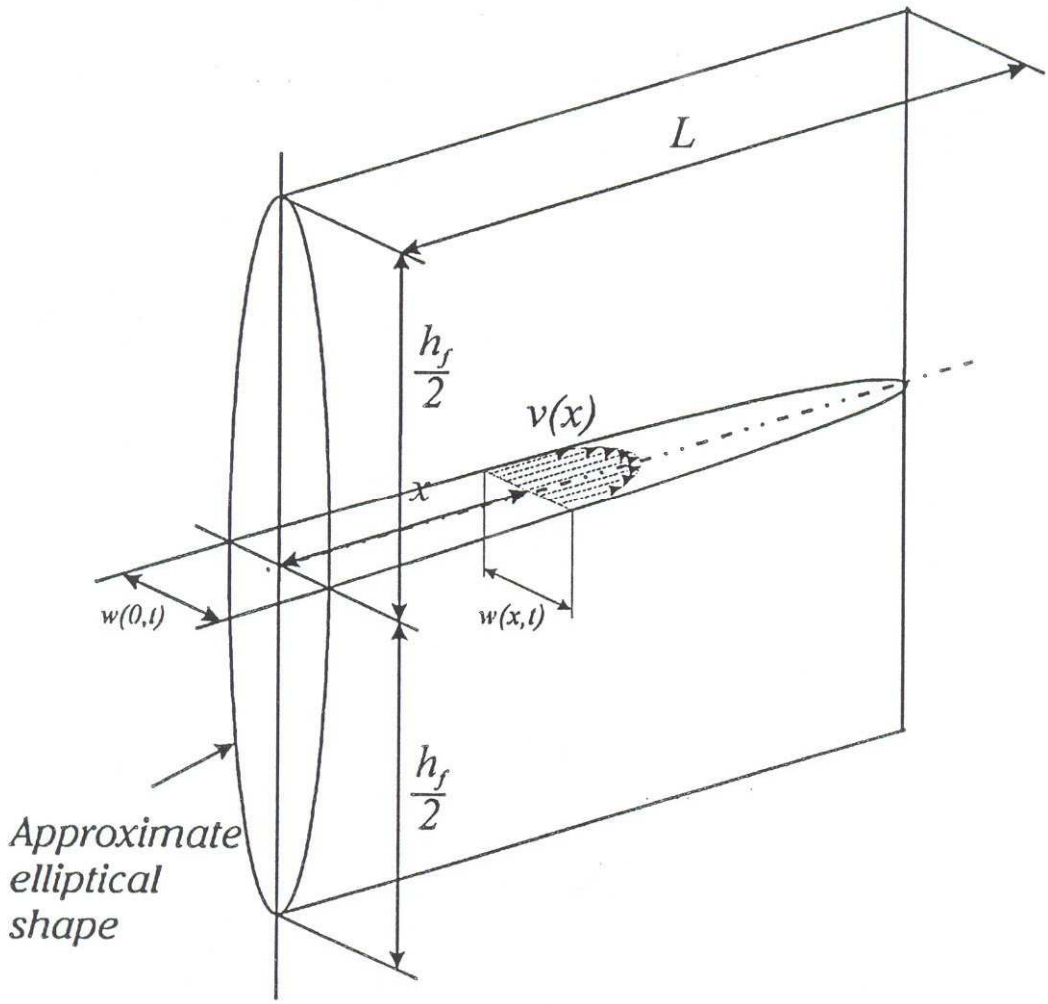

Figure 11
Schematic representation of linearly propagating fracture with laminar fluid flow according to Perkins and Kern.

For power law fluid, which is generally in use in hydraulic fracturing, Eq. 12 and Eq. 13 become

$$w(0,t) \propto \sqrt[2(n'+1)]{\frac{\left(1-\nu^2\right)K' q_i^{n'} L^2}{E h_f^{n'}}}\,, \tag{14}$$

and

$$w(0,t) \propto \sqrt[2(n'+1)]{\frac{\left(1-\nu^2\right)K' q_i^{\,n'} L}{E h_f^{\,n'-1}}} \tag{15}$$

respectively.

A complete solution of fracture geometry must include the effect of leakoff on fracture dimensions. Assuming that the overall leakoff coefficient C is constant and including spurt loss, analytical solution for fracture length, in KGD geometry, is given by

$$L = \frac{q_i\left(\pi h_f w_{(0,t)} + 8hV_{sp}\right)}{32\pi h^2 C^2}\left(\frac{2\alpha}{\sqrt{\pi}} - 1 + e^{\alpha^2} erfc\alpha\right), \tag{16}$$

where

$$\alpha = \frac{8hC\sqrt{\pi t}}{\pi h_f w_{(0,t)} + 8hV_{sp}}. \tag{17}$$

For large α values (α>4) which is for high leakoff and/or long time, Eq. 16 reduces to

$$L \rightarrow \frac{q_i\sqrt{t}}{2\pi Ch} \tag{18}$$

which is also applicable for PKN model. Eq. 18 can be used as a first step in iterative procedure for calculating fracture dimensions.

Fracturing Fluids and Additives

To achieve successful stimulation, the fracturing fluid must have certain physical and chemical properties:

1. It should be compatible with the formation rock.
2. It should be compatible with the formation fluids.
3. It should be capable of suspending proppants and transporting them deep into the fracture.
4. It should be capable, through its inherent viscosity, to develop the necessary fracture width to accept proppants.
5. It should be an efficient fluid (i.e., have low fluid loss).
6. It should be easy to remove from the formation.
7. It should have low friction pressure.
8. Preparation of the fluid should be simple and easy to perform in the field.
9. It should be stable so that it will retain its viscosity throughout the treatment.
10. The fracturing fluid should be cost-effective.

The first characteristic listed may be the most critical. If the chemical nature of the fracturing fluid causes swelling of naturally occurring clays in the formation, thereby plugging pore channels, the treatment will be a failure. If the fracturing fluid causes migration of fines and/or clays, the success of the treatment will be nullified. If the fracturing fluid creates emulsions and/or sludging of crude oil, then plugging rather than stimulation will occur. If fracturing fluid dissolves the cementing material that holds the grains of the sandstone together, spilling of the formation can occur and failure will results. The fracturing fluid should not cause scaling or paraffin problems. Compatibility is therefore a critical and necessary characteristic of a fracturing fluid. Potential fracturing fluids are listed in Table 1.

Table 1 POTENTIAL FRACTURING FLUIDS
Nonaqueous Fluids Refined oil (no friction reducer) Gelled oil (phosphate ester, low temperature) Water-external emulsion (two-thirds oil, one third H_2O)* Oil-based foam Gelled oil (phosphate ester, high temperature) Gelled methanol/water Gelled methanol (linear gel) Foamed methanol Crosslinked methanol/water (20 to 80% methanol) Foamed methanol/water (20 to 80%)
Aqueous Fluids Linear gel (guar, HPG or cellulose derivative) Low-temperature crosslinked gel Low, neutral, high pH Guar, HPG, CMHPG, CMHEC High-temperature crosslinked gel (delayed crosslink) HPG/cationic guar Linear gel, secondary gel system Foamed water Crosslinked foam *Although two-thirds oil, this fluid cannot normally be used in extremely-water-sensitive formations.

Water-Based Fracturing Fluids are used in the majority of hydraulic fracturing treatment today. The availability, cost-effectiveness, hydrostatic head, and lack of fire danger provided incentives for development of such additives as potassium chloride, clay stabilizers, surfactants and nonemulsifiers that make water-based fluids more versatile.

Using **Oil-Based Fracturing Fluids** is advantageous in certain situations to avoid formation damage to water-sensitive oil-producing formations that may be caused by the use of water-based fluids.

Methanol and isopropanol have been used for many years either as a component of water- and acid-based fracturing fluids or, in some cases, as the sole fracturing fluid. Alcohol, which reduces the surface tension of water, has frequently been used for the removal of water blocks. In fracturing fluids, alcohol has found wide use as a temperature stabilizer because it acts as an oxygen scavenger. Polymers are available that will viscosify pure methanol or isopropanol.

Emulsion Fracturing Fluids have been used for many years. In fact, some of the first oil-based fluids were oil-external emulsions. These products had many drawbacks, and their use was greatly limited because of extremely high friction pressure resulting from their high inherent viscosity and lack of friction reduction. Water-external emulsion fracturing fluids, although yielding somewhat higher friction pressure than comparable water-base gels, were indeed a break-through in industry and continue to be used widely as very cost-effective, functional fracturing system. An oil-in-water emulsion has good fluid-loss control, exhibits excellent proppant-carrying capacity and tends to clean up very well.

Foam-Based Fluids are simply a gas-in-liquid emulsion. The gas bubbles provide high viscosity and excellent proppant-transport capabilities. Stable foam has viscous properties similar to a gelled, water-based fluid. Using foam as a fracturing fluid has several advantages. The two most obvious are minimizing the amount of liquid placed on the formation and improving recovery of fracturing fluid by the inherent energy in the gas. In preparing foam, one typically uses 65 to 80% less water than in conventional treatments. Virtually any liquid can be foamed. One can foam methanol, methanol/water mixtures, hydrocarbons and water while as a gas phase N_2 and CO_2 are usually used.

Fracturing-fluid Additives can include as follows:

- *Biocides,* used to eliminate surface degradation of the polymers;
- *Breakers,* as an additives that enables a viscous fracturing fluid to be degraded controllably to a thin fluid that can be produced back out of the fracture;
- *Buffers,* used to control the pH for specific crosslinkers and crosslink time, or for speed up/slow down the hydration of certain polymers;
- *Surfactants and Nonemulsifiers,* which lower the surface tension of the water and reduce capillary pressure, but also prevent emulsification of a particular crude with a treating fluid;
- *Clay Stabilizers,* usually KCl, which is currently the most commonly used antiswelling agent. Virtually all treatments are designed to contain KCl. Certain *modified polyamines* enhance the clay-swelling control obtained with KCl and prevent the migration of fines.

The most common **Fluid-Loss Additive** consists of very finely ground silica flour (Table 2). A related product uses nonswelling clays, silica flour and guar gum. Another uses an oil-soluble resin and a swellable gum. Mixtures of vegetable compounds, talc, silica flour and guar gum used in another product. These products tend to plug the face of the fracture, with very little penetration into the formation matrix.

Table 2 FLUID-LOSS ADDITIVES	
Oil Based	*Water Based*
Adomite Mark II	Silica flour
Silica flour	Adomite Aqua
Adomite Aqua	Mixture gum and oil-soluble resin
Lime powder	Mixture gum and talc
Sodium bicarbonate powder	1 to 5% Diesel oil
N_2 / CO_2	0.05 to 1% aromatics and surfactant
100-mesh salt or sand	N_2 / CO_2
	100-mesh sand, oil-soluble resin, salt or benzoic acid

Propping Agents and Fracture Conductivity

At this point it is worthwhile to recall that the goal of hydraulic fracturing is to increase well productivity by altering the flow pattern in the formation near wellbore from one that is radial with flowlines converging to the wellbore to one that is linear with flow to a conductive fracture that intersects the wellbore. For the effort to be successful, the fracture must be much more conductive than the formation. To obtain a high-permeability fracture, a granular propping agent must be added to the fracturing fluid.

The purpose of the propping agent (proppant) is to keep the walls of the fracture apart so that a conductive path to the wellbore is retained after pumping has stopped and fluid pressure has dropped below that required to hold the fracture open. Ideally, the proppant will provide flow conductivity large enough to make negligible any pressure losses in the fracture during fluid production. In practice, this ideal might not be achieved because the selection of a proppant involves many compromises imposed by economic and practical considerations.

The effect of fracture conductivity, wk_f, on well productivity is usually expressed in terms of a mathematical or graphical model. An examination of Fig. 3 shows that the conductivity ratio must be about 1,000 before a stimulation ratio of 2 (a minimum design value) is achieved. For fractures in the range of 0.1 in (2.5 mm) wide, the permeability of the proppant must be 10,000 times the permeability of the reservoir rock to meet this goal. As an example, for a formation of 10 md permeability, proppant permeability must be about 100 darcies. If the reservoir rock permeability is only 0.1 md and proppant permeability remains at 100 darcies, the conductivity ratio becomes 100,000. This is about the upper limit of fracture conductivity that is beneficial in increasing the stimulation ratio of a fractured well. With the higher values of conductivity ratio, improved productivity depends primarily on the ratio of fracture length to the drainage radius of the well, L / r_e. A large fracture treatment, by providing greater propped fracture length, L, would increase the stimulation ratio, but higher permeability in the fracture would have little benefit.

Sand was the first material used as a proppant. Since the late 1940s, several materials have been used. Some of the unsuccessful efforts included aluminium pellets, metal shot, glass beads, walnut shells, plastic beats, and polymer spheres. Some of the successful and more commonly used propping agents today include **sand, resin-coated sand, intermediate-strength proppant (ISP) ceramics, and high-strength proppants (sintered bauxite, zirconium oxide, etc.).**

The effect of proppant type on pack permeability, at different closure stress, is shown on Fig. 12 while Fig. 13 includes the long-term data as well.

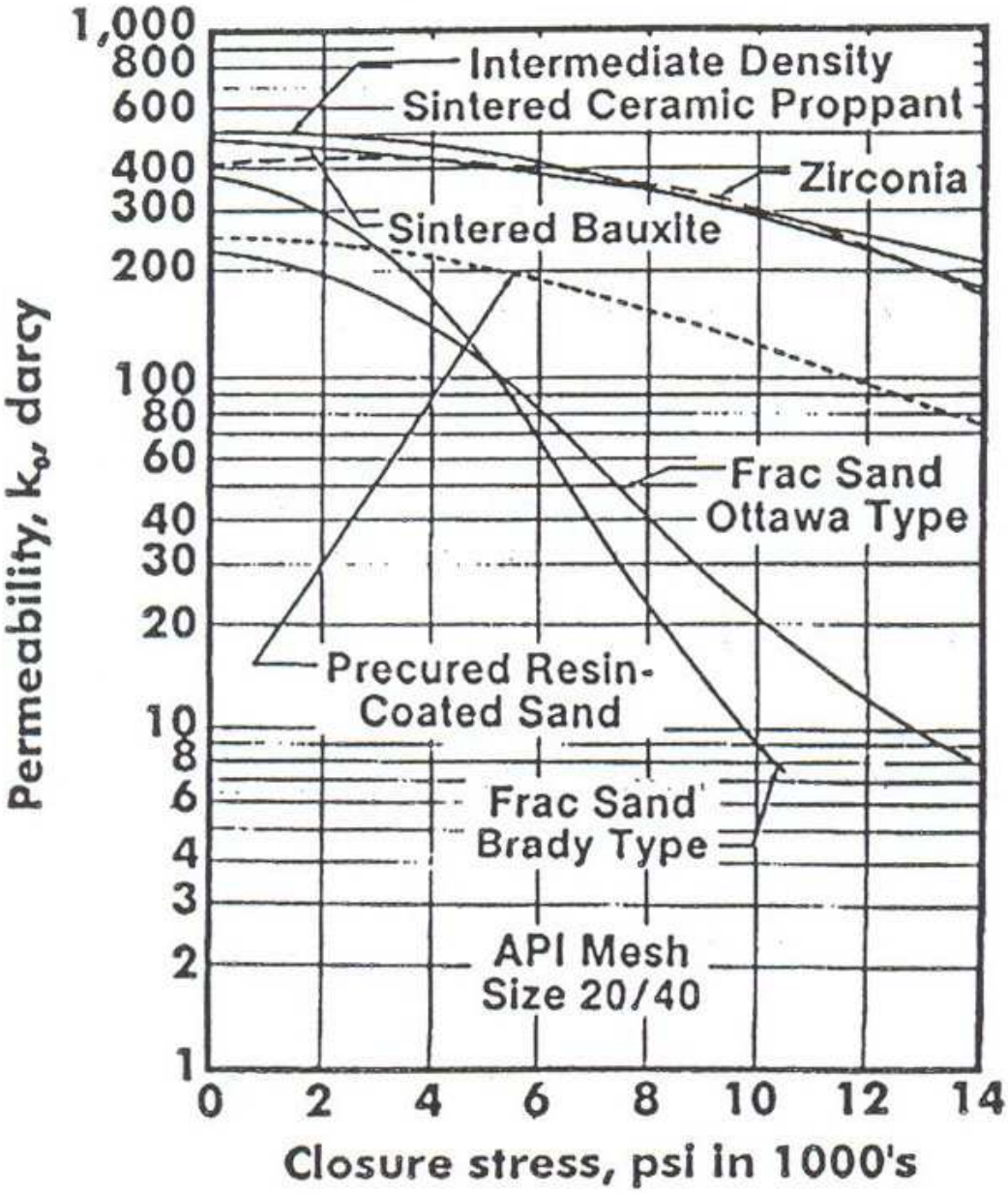

Figure 12
Effects of proppant type on pack permeability.
Relative performance of the various proppants is demonstrated for the 20/40 mesh size.

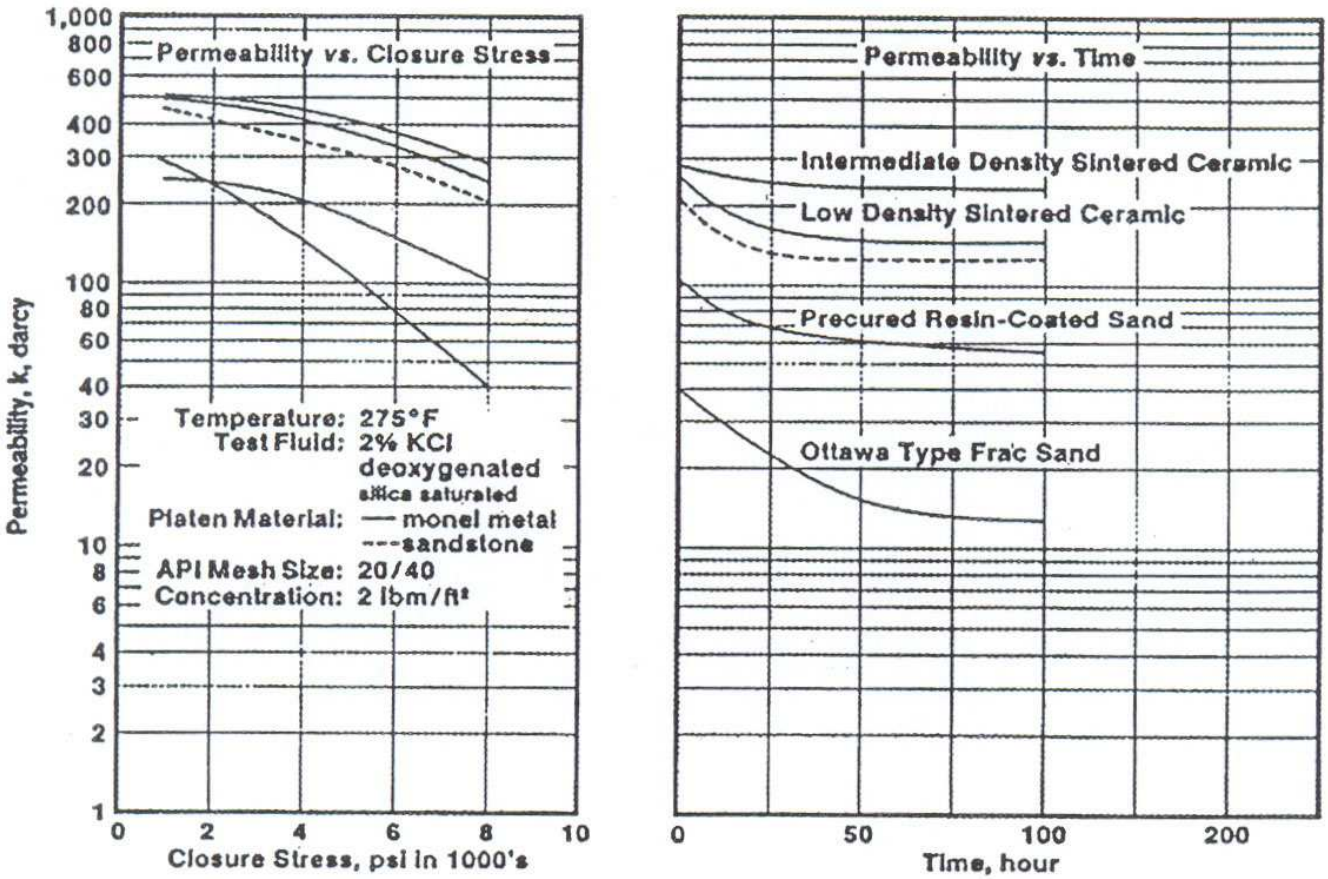

Figure 13

This example of data shows the general shape of the long-term data for all proppants.

MATRIX ACIDIZING

Various types of formation damage can be identified by location. Fig. 14 shows some common types of damage; such production impairment can occur anywhere in the production system from wellbore to perforations and into the formation. Such a distinction is not usually made because seldom are most of the plugging phenomena located in only one part of the flow system. A proper design of a remedial treatment requires not only a good determination of the damage but also the knowledge of its location. Wellbore cleanup and matrix treatments may use similar fluids, tailored to the nature of the damage. The choice between two very different operations depends entirely on the location of the damage.

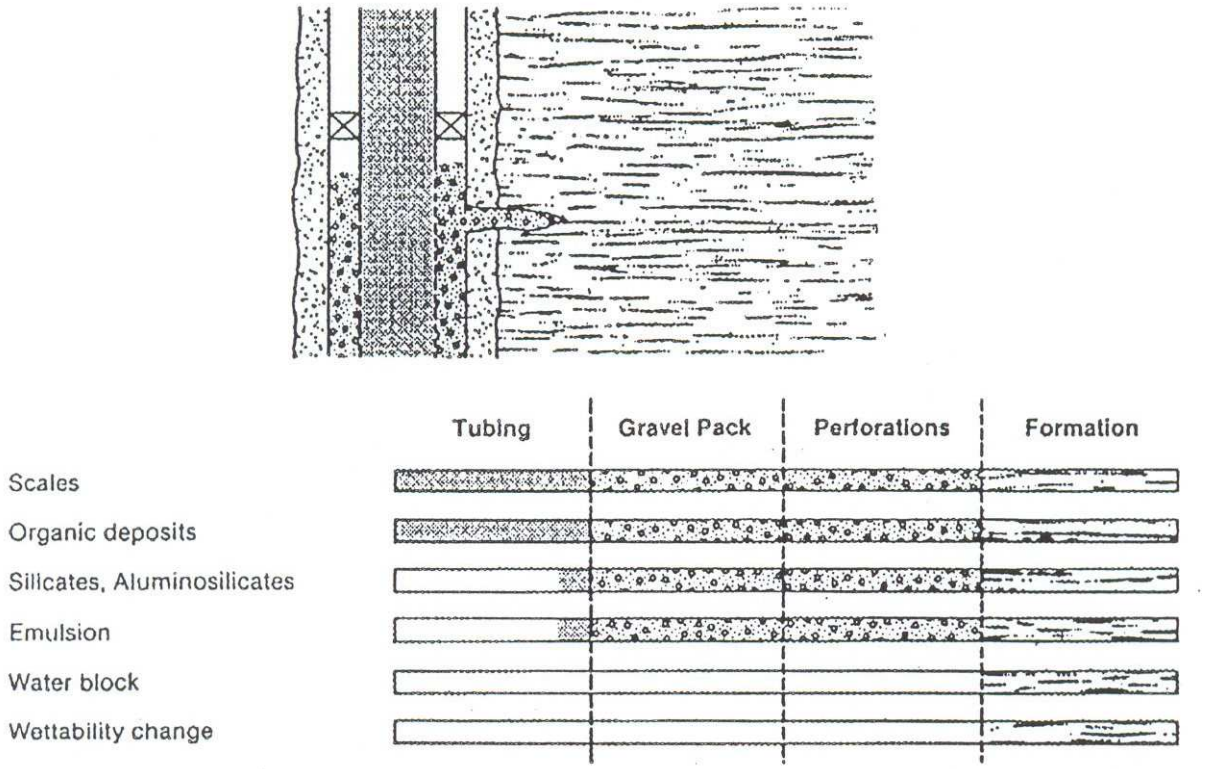

Figure 14
Location of various types of damages.

Plugging can be caused by various materials – particles migrating through the porous medium or precipitates produced by changes in the chemical or physical initial state of the reservoir. Such plugging action can even be caused by liquid (or gas) changing the relative permeability of the formation rock.

Once the damage and its origin have been characterized, the correct remedial action can be taken. Various types of damage can coexist since almost every operation performed on the well (drilling, completion, workover, production and stimulation) is a potential source of damage. The physical characteristics, not the

origin, of the damage determine the treating fluid. The most common and important types of damage, with an emphasis on selecting the fluid to remove them, are shown in Fig. 15.

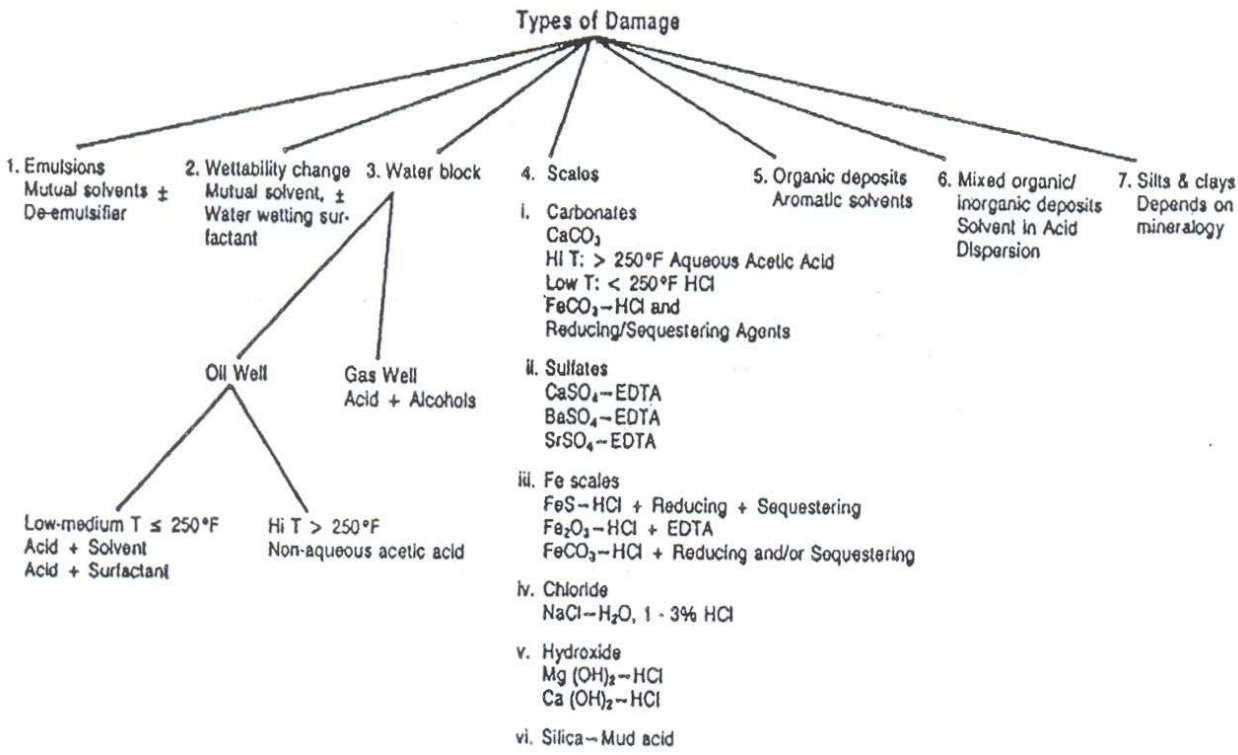

Figure 15
Treatment selection and nature of damages.

Damage from silts and clays includes the invasion of the reservoir permeability by drilling mud and the swelling and/or migration of reservoir fines. Clays or other solids from the drilling, completion or workover fluids can invade the formation when these particles are smaller than the pore throat openings. Any subsequent increase in flow rate through the invaded zone will force a high concentration of particles to migrate. Bridging may then occur and reduce the overall permeability of the pore network.

When water-base filtrates from drilling, completion, workover or treating fluids invade the porosity of the reservoir, they can disturb the equilibrium between the clays and formation waters. This is normally due to a change in salinity that creates imbalances in the forces between clays. Smectite clays can swell and drastically reduce permeability. Flocculated aggregates of migratory clay can be dispersed and, subsequently, block pore throats. This disturbance of native clays is the most common and, probably, the most important cause of damage.

During production, particles can bridge near the wellbore and reduce productivity. When the damaging particles come from the reservoir rock, they are usually referred to as fines. This term includes clays (phyllosilicates with a size of typically less than 4μm) and silts (silicates or aluminosilicates with a size between 4 and 64 μm). Damage from fines is located in near-wellbore area within a 1 to 1.5 m radius.

According to solubility of the common minerals in acids (Table 3), this kind of damage in sandstone formations is removed by treatment with acid containing *HF* ("mud acid" of various strengths or in combination with organic acids or fluoboric acid and its similar variations.)

Table 3
SOLUBILITY OF THE COMMON MINERALS IN ACIDS

Minerals		Chemical Composition	Solubility in	
			HCl	HCl + HF
Quartz		SiO_2	None	Low
Feldspars	Orthoclase Microcline	Si_3AlO_8K	None	Moderate
	Albite Plagioclase	Si_3AlO_8Na $Si_{2-3}Al_{1-2}O_8(Na,Ca)$	None None	Moderate Moderate
Micas	Biotite	$(AlSi_3O_{10})K(Mg,Fe)_3(OH)_2$	None	Moderate
	Muscovite	$(AlSi_3O_{10})K(Al)_2(OH)_2$	None	Moderate
Clays	Kaolinite	$Al_4(Si4O_{10})(OH)_8$	None	High
	Illite	$Si_4\text{-}xAl_xO_{10}(OH)_2KxAl_2$	None	High
	Smectite	$(1/2Ca,Na)_{0.7}(Al,Mg,Fe)_4(Si,Al)_8O_{20}(OH)_4nH_2O$	None	High
	Chlorite	$(AlSi_3O_{10})Mg_5(Al,Fe)(OH)_8$	Moderate	High
	Mixed-Layer	Kaolinite, ilite or chlorite with smectite	None	High
Carbonates	Calcite*	$CaCO_3$	High	High
	Dolomite*	$Ca, Mg(CO_3)_2$	High	High
	Ankerite*	$Ca(Mg,Fe)(CO_3)_2$	High	High
Sulfates	Gypsum	$CaSO_4, 2H_2O$	Moderate	High
	Anhydrite	$CaSO_4$	Moderate	High
Others	Halite	NaCl	High	High
	Iron Oxides	FeO, Fe_2O_3, Fe_3O_4	High	High
*CaF_2 precipitation				

An *HCl* system is normally used to remove fines damage in **carbonate formation**. In this case the fines are not dissolved, but are dispersed in the natural fractures or in the wormholes just created.

Acidizing sandstone formations results primarily in dissolution of permeability-damaging minerals rather than in creation of new flow paths, as is the case when acidizing carbonates. Besides the basic quartz grains, sandstones contain other silicoaluminate compounds that are often located in the pore space and provoke flow restrictions. Sandstone occasionally contain carbonates, metallic oxides, sulfates or chlorides and amorphous silica. They may also have drilling mud or cement filtrates from invasion.

Hydrofluoric acid (*HF*) is the only common acid that dissolves siliceous minerals (Table 3). Therefore, all formulations used in matrix sandstone acidizing involve hydrofluoric acid or its precursors. The most commonly used acid system is "mud acid", a mixture of hydrochloric and hydrofluoric acids in variable proportions (Table 4). Selecting the treatment fluid is an important step in designing a matrix treatment. The process of selecting a fluid is complex because many parameters are involved, and each parameter may vary widely. Fig. 16 shows a decision tree for designing a

treatment for a sandstone reservoir that is damaged by silts and clays. The criteria for selecting the treating fluid are mineralogy, mechanisms of formation damage and its removal, petrophysics, and well conditions.

Table 4
Acid Use Guidelines – Sandstone Acidizing
(from McLeod)

HCl solubility > 20%	*Use HCl only*
High permeability (100 md plus)	
High quartz (80%), low clay (< 5%)	12% HCl – 3% HF (1)
High feldspar (> 20%)	13.5% HCl – 1.5% HF (1)
High clay (> 10%)	6.5% HCl – 1% HF (2)
High iron chlorite clay	3% HCl – 0.5% HF
Low permeability (10 md or less)	
Low clay (< 5%)	6% HCl – 1.5% HF (3)
High chlorite	3% HCl – 0.5% HF (4)
Notes: (1) Preflush with 15% HCl. (2) Preflush with sequestered 5% HCl. (3) Preflush with 7.5% HCl or 10% acetic acid. (4)Preflush with 5% acetic acid.	

The decision path for additive selection is quite straight-forward if the necessary information is available. The tree provides only a general answer. Acid additives have not been included in the discussion here because they are not designed to "remove" damage. In certain cases, a clay stabilizer can be a viable and economical alternative to a fluoboric acid treatment. However, it must be considered an integral part of an acid treatment.

The fluid selection path in Fig 16 indicates only the main treating fluids. However, preflush and postflush (overflush) fluids maximize the efficiency of the treating fluid. A typical sequence for a conventional mud-acid (*HF*) treatment is preflush/main treating fluid/postflush. An HCl solution is usually used as a preflush when acidizing sandstone with mud acid. Various acid strength can be used, depending on the formation, to accomplish the following:

- avoid contact between *HF* acid and any formation brine containing K, Na or Ca;
- dissolve a maximum amount of carbonate to minimize precipitation. Acetic acid can replace HCl to dissolve carbonates. It acts as a low pH buffer and complexing agent, which helps minimize the tendency of iron compounds to precipitates as HCl is spent.

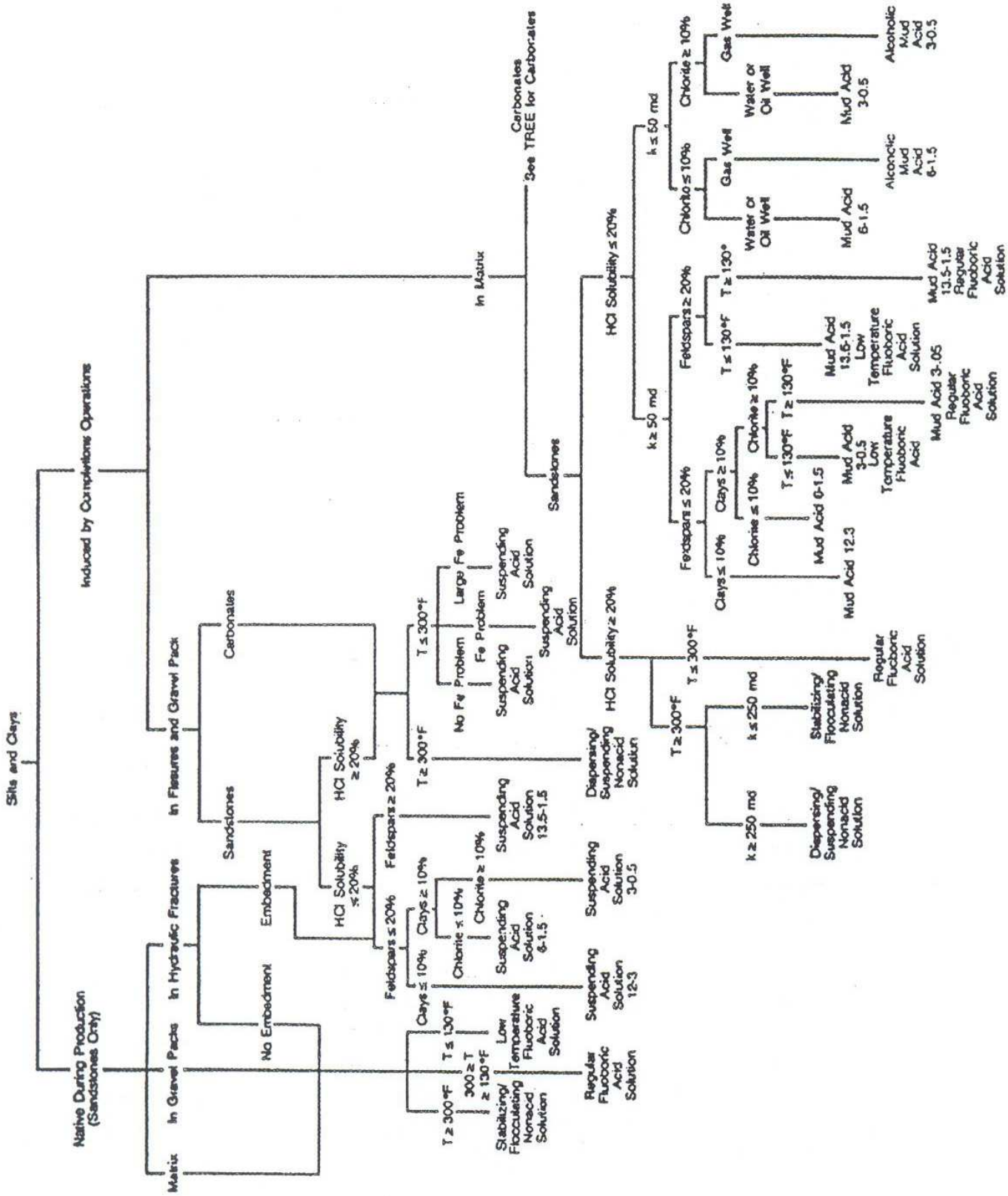

Figure 16
Treatment fluid selection in sandstone acidizing.

Aromatic solvents (toluene or xylene), with or without HCl, can be used to remove paraffin and asphaltene components. Mutual solvents such as ethylene glycol monobutyl ether (EGMBE) are also used frequently in preflush and overflush fluids. Other additives, such as surfactants, clay stabilizers, and complexing agents, can be formulated as necessary.

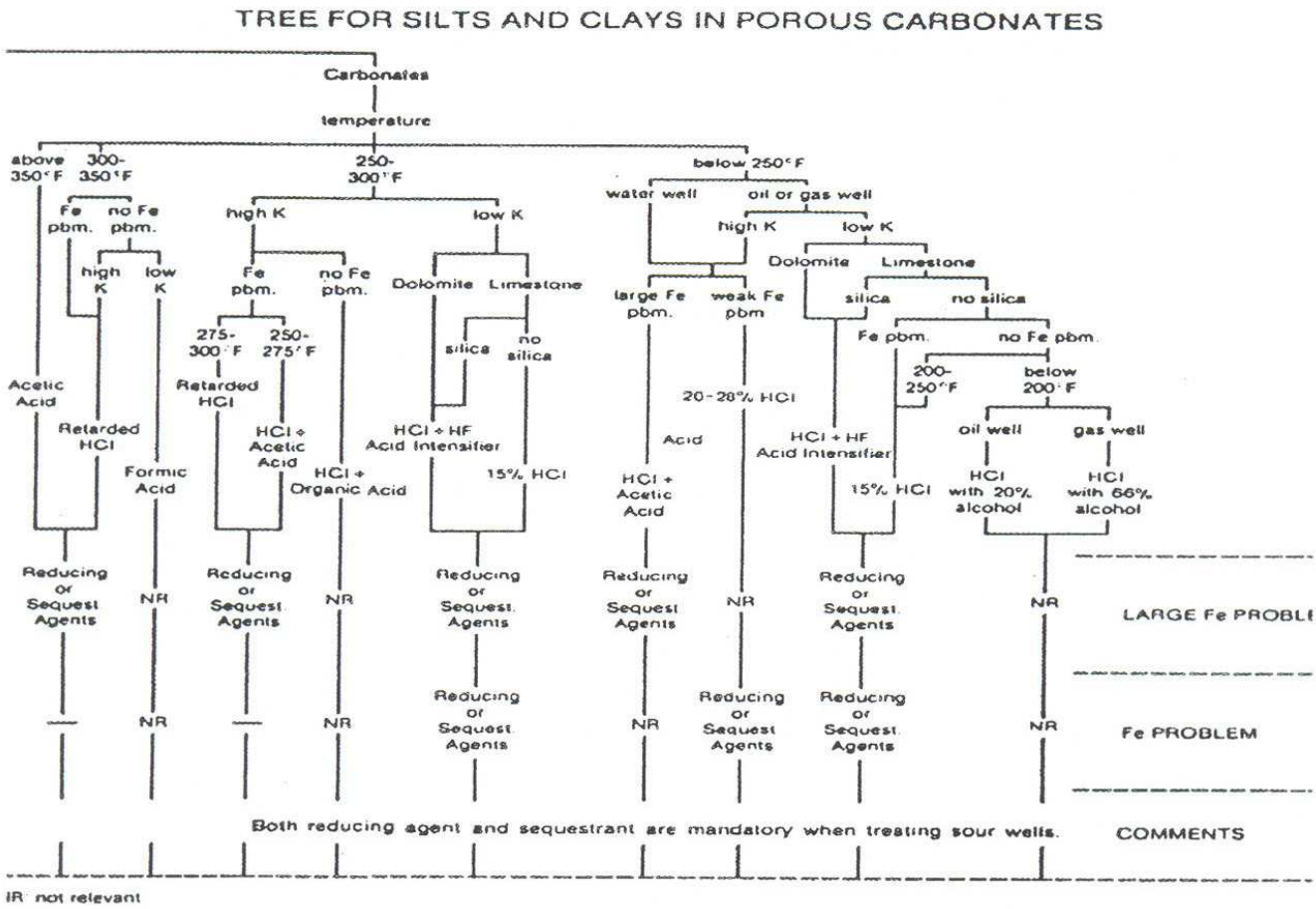

Figure 17

The role of the overflush is to displace the main acid more than 1 m from the wellbore. If this is not done, precipitation of reaction products from the spent acid will decrease productivity. However, the main treatment fluid must still be carefully selected to minimize the formation of precipitates during the flowback. Recommended overflush fluids are:

- NH_4Cl, or 5% to 7.5% HCl, or diesel for oil wells,
- NH_4Cl, or 5% to 7.5% HCl for gas wells.

In all cases, a surfactants and/or a mutual solvent is recommended to leave the formations water wet and to facilitate flowback of spent acids.

Fig. 17 shows a decision tree for designing a treatment for a **carbonate reservoir**.

Matrix acidizing is defined as the injection of fluids at pressures below fracturing pressure. The injection fluid flows either through the existing porous medium or through new passageways created by fluid itself. The maximum possible injection rate that does not fracture the formation is derived from Darcy's radial flow equation (Eq.1). For this purpose, the differential pressure is equal to the difference between fracturing and formation pressure. That is a simplified inflow performance relationship; it does not account for transient effects, multiphase flow, or reservoir heterogeneities. The value obtained from them with the initial skin value can be used only as a guideline for determining the initial rate.

Flowback of spent fluids from conventional mud-acid treatments should be accomplished as soon as possible. Detrimental reaction products will be formed within the formation if spent mud-acid formulations remain for an extended period of time. To assist such flowback it is becoming common practice to use nitrogen and coil tubing for lifting spent fluids.

NOMENCLATURE

B = Formation volume factor, m^3/m^3
C = Leakoff coefficient, $m/s^{1/2}$
E = Young's Modulus, Pa
F_{CD} = Dimensionless fracture conductivity
h = Reservoir thickness, m
h_f = Fracture height, m
k = Reservoir permeability, m^2
k_f = Fracture permeability, m^2
k_s = Damaged permeability, m^2
K' = Power-law consistency index, Pa × $s^{n'}$
L = Fracture length (one wing), m
n' = Power-law flow behaviour index, dimensionless
p_e = Reservoir pressure, Pa
p_f = Fracturing pressure, Pa
p_w = Bottomhole flowing pressure, Pa
$P.I.$ = Productivity index, $m^3/s/Pa$
q = Flow rate, m^3/s
q_i = Injection rate, m^3/s
r_e = Reservoir radius, m
r_w = Well radius, m
r_w' = Effective well radius, m
s = Skin factor, dimensionless
$s_{c+\theta}$ = Skin due to partial penetration and slant
s_d = Skin due to damage
s_p = Skin due to perforations
s_t = Total skin effect
t = Time, s
V_{sp} = Spurt loss, m^3/m^2
w = Fracture width, m
x = Linear distance, m
x_f = Fracture half-length (= L), m
z = Vertical linear distance, m
γ = Surface energy, J/m^2
μ = Viscosity, Pa × s
ν = Poisson's ratio
σ = Stress, Pa